BIAMP®

SPM723

Programmable Stereo Preamp/Mixer

Operation Manual

Biamp Systems, 10074 S.W. Arctic Drive, Beaverton, Oregon 97005 U.S.A. (503) 641-7287 www.biamp.com
an affiliate of Rauland-Borg Corp.

TABLE OF CONTENTS

INTRODUCTION

The **SPM723** provides seven stereo line inputs, two mono mic/line inputs, and three stereo outputs. Complete programmability and control of the SPM723 includes independent left/right levels for each input and output, mic/line routing & priority, automatic/manual program ducking, mic/line & output tone adjustment, and 16 memory presets. The SPM723 is extremely versatile, with software customized setup, making it ideally suited for many applications including meeting rooms, restaurant/bars, and retail stores.

SPM723 features include:

- settings programmed via BiampWin PC control software
- seven stereo line inputs, with individual volume & mute
- ‘surround sound’ support assigns input 6 to the aux output
- input 7 assignable stereo unbalanced or mono balanced
- input 7 'override' select via external switch or input signal
- two balanced mic/line inputs, with HPF & phantom power
- mic/line inputs include individual trim, tone, volume & mute
- stereo input ‘ducking’ via external switch or mic/line signals
- separate left/right or stereo ‘ganged’ faders on all inputs
- independent stereo main & stereo zone balanced outputs
- balanced stereo aux output, with independent source select
- outputs include 3-band, mid-sweep stereo tone adjustment
- outputs independently assignable for stereo/mono operation
- separate left/right or stereo ‘ganged’ faders on all outputs
- signal level meters on input 7, mic/line inputs, & all outputs
- mixing of multiple input signals or selection of single source
- store & recall up to sixteen non-volatile memory presets
- remote control via RS-232 & programmable logic inputs
- Windows® 95/98/NT/2000/XP software & cable included
- incorporates **AES** recommended grounding practices
- CE marked and **UL** / **C-UL** listed power source
- covered by Biamp Systems' five year warranty

FRONT & REAR PANEL FEATURES

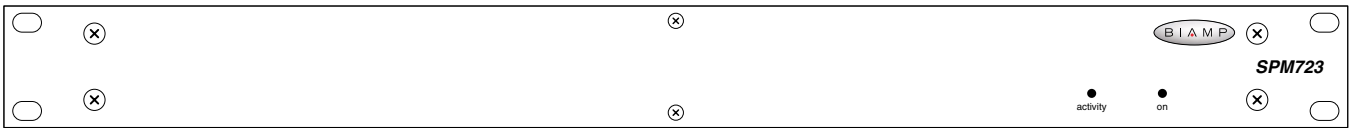

FRONT PANEL FEATURES

Activity LED: This red LED indicates when control information is being received via RS-232.

On Indicator: When the power transformer is plugged in, and AC power is applied to the SPM723, the red On indicator remains lit. When power is removed, all 'current' settings (sources, levels, tone, etc.) will be stored in non-volatile memory and recalled when power is restored. During Setup the SPM723 may instead be set to always recall Preset #1 when power is turned back on (see Setup on pg. 10).

REAR PANEL FEATURES

AC Power Cord: The power transformer provides 27 Volts AC to the SPM723, and is detachable via a 5-pin DIN connector. The SPM723 has two internal 'self-resetting' fuses (there are no user serviceable parts inside the unit). If the internal fuses blow, they will attempt to re-set after a short period. However, this may be an indication that the SPM723 requires service.

Serial Port: This 9-pin Sub-D (male) connector provides an RS-232 Serial Port for remote control via computer or third-party controllers (see RS-232 Control on pg. 16). The Serial Port has the following pin assignments (left-to-right & top-to-bottom): **Pin 1)** not used; **Pin 2)** Receive Data (RxD) input; **Pin 3)** Transmit Data (TxD) output; **Pin 4)** Data Terminal Ready (DTR) output; **Pin 5)** Ground; **Pin 6)** not used; **Pin 7)** Request To Send (RTS) output; **Pin 8)** not used; **Pin 9)** not used. BiampWin software and a null-modem cable are provided for programming (see Setup on pg. 4). ***NOTE:*** *The Serial Port can also transmit commands received via the Logic Inputs (see Setup on pg. 9).*

Link Port: This 9-pin Sub-D (female) connector provides a Link Port for RS-232 control of multiple BIAMP products (see RS-232 Control on pg. 16). The Link Port of one device simply connects to the Serial Port of the next device (and so forth). Link cables are available as an option (Biamp #909-0057-00). ***NOTE:*** *All but the final device in a system should have the Link Switch pressed in (see below).* The Link Port has the following pin assignments (right-to-left & top-to-bottom): **Pin 1)** not used; **Pin 2)** Transmit Data (TxD) output; **Pin 3)** Receive Data (RxD) input; **Pin 4)** not used; **Pin 5)** Ground; **Pin 6)** not used; **Pin 7)** not used; **Pin 8)** not used; **Pin 9)** not used. ***NOTE:*** *The Link Port will also transmit commands received via the Logic Inputs (see Setup on pg. 9).*

Link Switch: The Link Switch is used when connecting multiple devices in a 'Link Port to Serial Port' configuration (see Link Port above). From the factory, the Link Switch is released (out). When connecting multiple devices, the Link Switch must be depressed (in) on all devices except the final device in the system (the device with no Link Port connection).

FRONT & REAR PANEL FEATURES

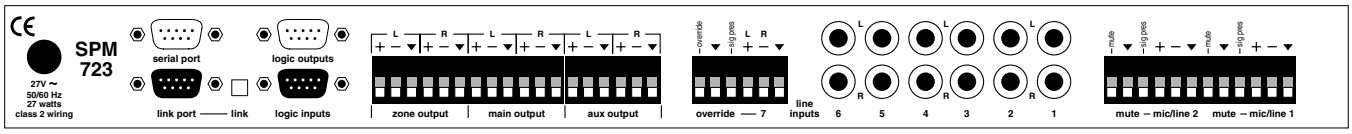

Logic Outputs: This 9-pin Sub-D connector provides Logic Outputs 1~8 (see Logic Outputs on pg. 15). Logic Outputs may be used to control external switching circuits, such as relays or other BIAMP products. These outputs are typically used to provide simultaneous audio & video source selection, by controlling an external video switching device.

Logic Inputs: This 9-pin Sub-D (female) connector provides eight logic inputs for controlling the SPM723 via contact-closures (see Logic Inputs on pg. 14). Logic Input functions are programmed via software (see Setup on pg. 9). ***NOTE:*** *From the factory, Logic Inputs 1~8 have no pre-programmed function.*

Main & Zone Outputs: These plug-in barrier strips provide the balanced stereo line-level Main & Zone Outputs. For balanced output, wire high to (+), low to (-), and ground to (▼). For unbalanced output (-6dB gain), wire high to (+) and ground to (▼), leaving (-) unconnected. Main & Zone Outputs can be set for stereo or mono operation, and include signals from Line Inputs 1~7 and Mic/Line Inputs 1 & 2, as determined via software (see Setup on pg. 4).

Aux Output: This plug-in barrier strip provides the balanced stereo line-level Aux Output. For balanced output, wire high to (+), low to (-), and ground to (▼). For unbalanced output (-6dB gain), wire high to (+) and ground to (▼), leaving (-) unconnected. Aux Output can be set for stereo or mono operation, and includes signals from Main & Zone Outputs, as determined via software (see Setup on pg. 7).

Line Inputs 1~6: These RCA connectors provide the unbalanced stereo Line Inputs 1~6.

Line Input 7: This plug-in barrier strip provides the unbalanced stereo Line Input 7. Line Input 7 can instead be set for balanced mono input, via software (see Setup on pg. 4).

Override: This plug-in barrier strip provides Line Input 7 Override, which is a priority selection of that input over all other stereo line inputs. Wiring (sig pres) to (override) causes automatic override whenever signal is present at Line Input 7. Manual override instead uses a contact-closure wired between (override) & (▼). Override functions are determined via software (see Setup on pg. 13).

Mic/Line Inputs 1 & 2: These plug-in barrier strips provide the balanced mono inputs for Mic/Line 1 & 2. For balanced input, wire high to (+), low to (-), and ground to (▼). For unbalanced input, wire high to (+), and ground to both (-) & (▼). Mic/Line 1 & 2 functions are determined via software (see Setup on pg. 6).

Mute: These plug-in barrier strips provide for 'talk-over' ducking of the stereo line input signals. By wiring (signal present) to (mute), automatic ducking will occur whenever signal is present at the respective Mic/Line Input. Manual ducking instead uses a contact-closure wired between (mute) & (▼). Mute functions are determined via software (see Setup on pgs. 11 & 12).

SPM723 parameters are all adjustable using the BiampWin software and null-modem cable provided with the unit. The BiampWin software provides programs for various BIAMP products, including the SPM723. The SPM723 program includes seven control screens, which are described on the following pages. Once the software is started (and Comm Port Configuration is set), the control screens are accessed via the drop-down menus at the top of the opening screen. The Mix screen appears whenever an SPM723 file is opened, and it has four tabs: Main Program, Zone Program, Mic/Line 1 / Mic/Line 2, & Aux Output. The Configure SPM723 menu offers additional screens for Button Definitions, Logic Input Definitions, & Configuration Options. The File menu provides functions such as save, open, download, etc. The Settings menu recalls the Comm Port Configuration screen. The Window menu arranges active product screens. The Help menu explains available adjustments. To install BiampWin Software: Select 'Run' from 'Start' menu, and browse to 'BiampWin' on appropriate drive. System Requirements: Windows® 95/98/NT/2000/XP with 8MB of available hard disk space (serial port required for 'on-line' operation).

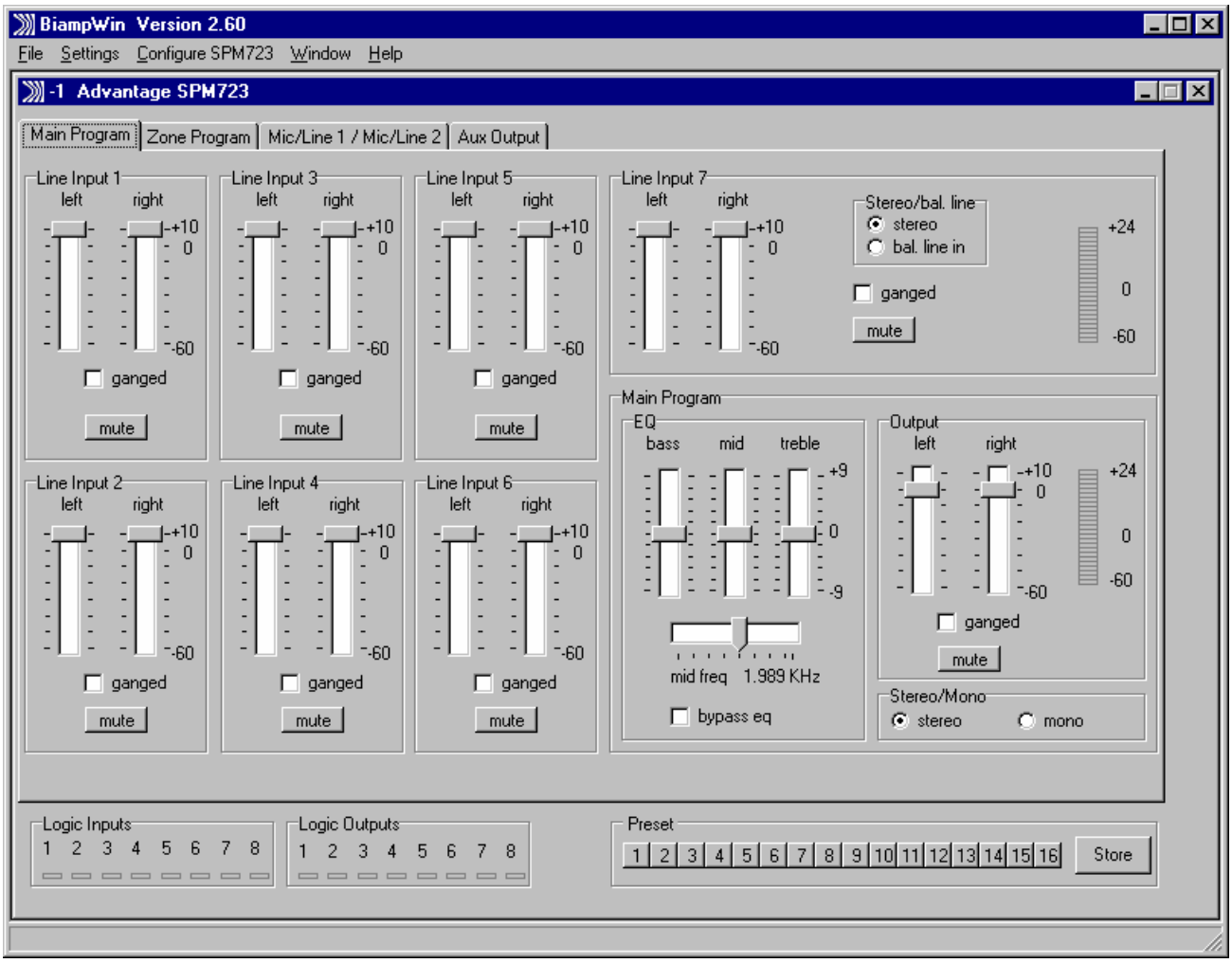

MAIN PROGRAM SCREEN

The Main Program tab on the Mix screen provides level faders & mute buttons for mixing Line Inputs 1~7 to the Main Output. The faders on each input can be assigned for separate left/right or stereo ganged operation. Line Input 7 includes a signal level meter, and can be assigned as either a normal unbalanced stereo line input or as a special balanced mono line input. The Main Output section also provides faders which can be assigned for separate left/right or stereo ganged operation, and includes a mute button, a 3-band mid-sweep EQ, and a signal level meter. In addition, the Main Output may be switched from stereo operation to mono operation (a mono sum of the left/right signals then appears at both outputs). The bottom of the screen shows on/off status of the eight Logic Inputs and the eight Logic Outputs. Sixteen buttons are provided for recalling non-volatile memory presets. A separate Store button provides a menu for storing settings into the sixteen memory preset locations. Presets contain settings affecting all inputs/outputs. The title bar at the top of the Mix screen shows Device #, custom Device Name, & model of product being controlled. BiampWin software can operate 'off-line' (no product connected) by opening a 'new' file for the desired product. The Device # for 'off-line' files is assigned sequentially as a negative number.

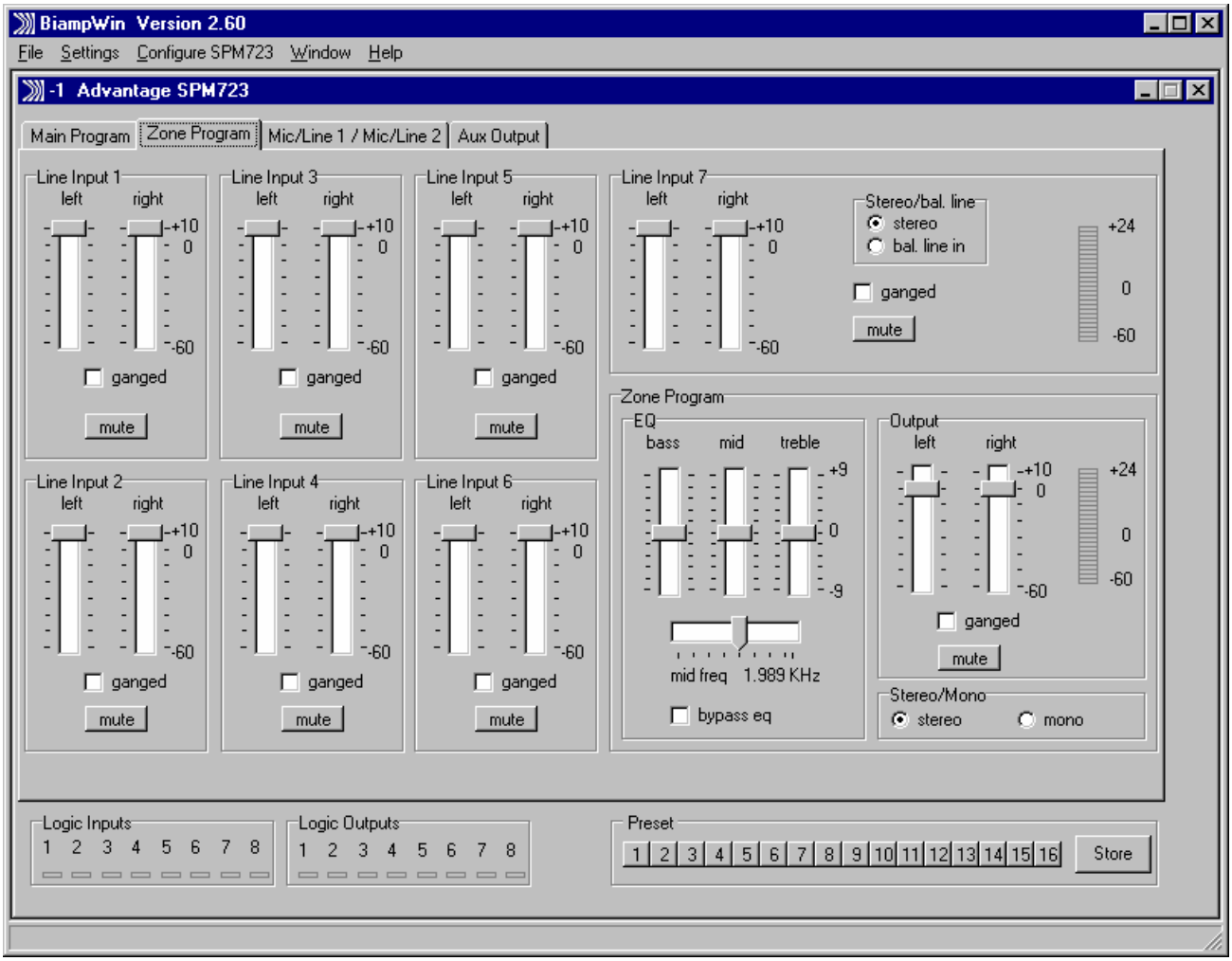

ZONE PROGRAM SCREEN

The Zone Program tab on the Mix screen provides level faders & mute buttons for mixing Line Inputs 1~7 to the Zone Output. The faders on each input can be assigned for separate left/right or stereo ganged operation. Line Input 7 includes a signal level meter, and can be assigned as either a normal unbalanced stereo line input or as a special balanced mono line input. The Zone Output section also provides faders which can be assigned for separate left/right or stereo ganged operation, and includes a mute button, a 3-band mid-sweep EQ, and a signal level meter. In addition, the Zone Output may be switched from stereo operation to mono operation (a mono sum of the left/right signals then appears at both outputs). The bottom of the screen shows on/off status of the eight Logic Inputs and the eight Logic Outputs. Sixteen buttons are provided for recalling non-volatile memory presets. A separate Store button provides a menu for storing settings into the sixteen memory preset locations. Presets contain settings affecting all inputs/outputs. The title bar at the top of the Mix screen shows Device #, custom Device Name, & model of product being controlled. BiampWin software can operate 'off-line' (no product connected) by opening a 'new' file for the desired product. The Device # for 'off-line' files is assigned sequentially as a negative number.

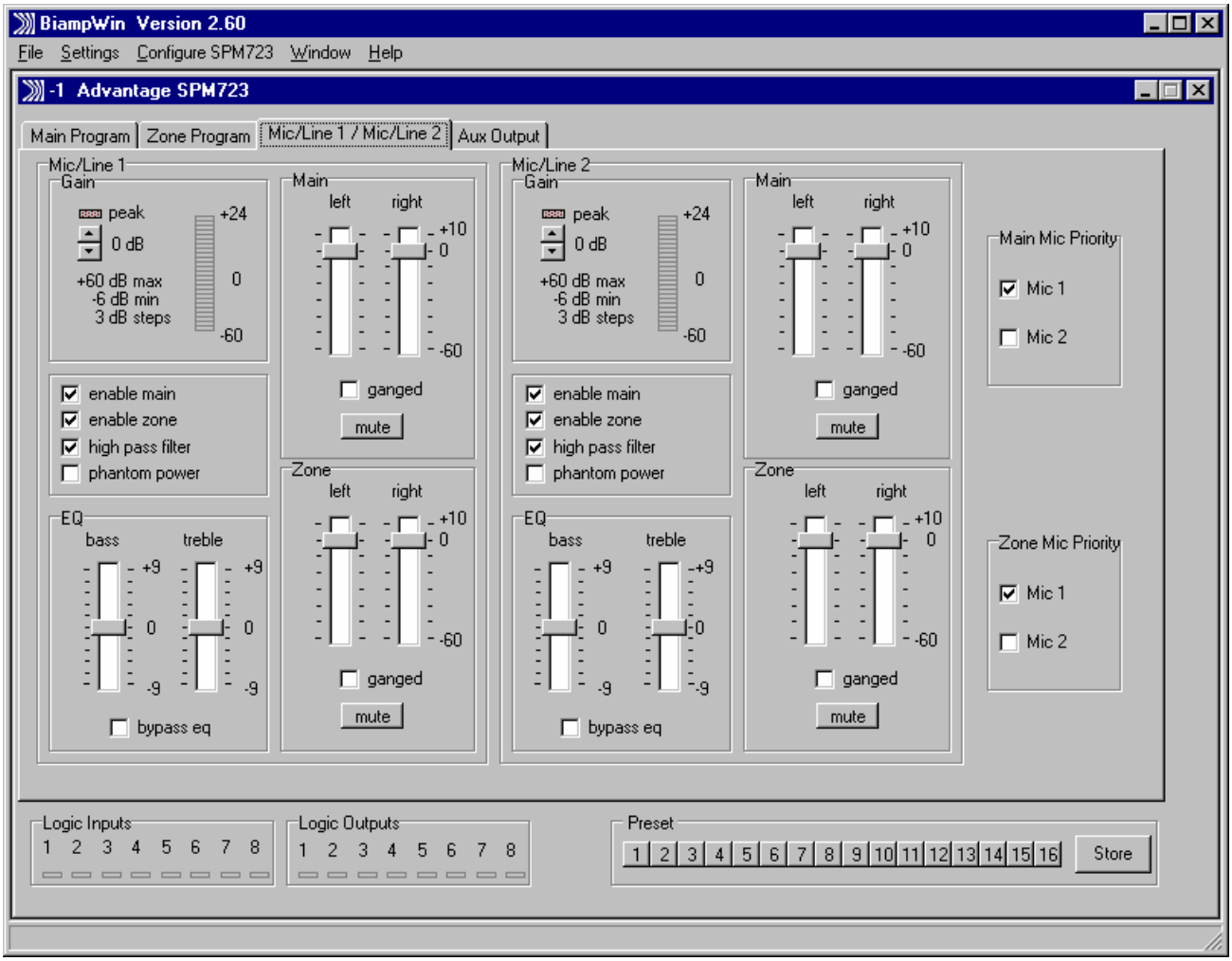

MIC/LINE 1 / MIC/LINE 2 SCREEN

The Mic/Line 1 / Mic/Line 2 tab on the Mix screen provides level faders & mute buttons for mixing Mic/Line Inputs 1 & 2 to both the Main & Zone Outputs. The faders on each input can be assigned for separate left/right or stereo ganged operation. Each Mic/Line Input includes adjustable Gain, with a Peak indicator and a signal level meter. Gain adjusts the input to compensate for different signal levels. For best performance, adjust Gain so the Peak indicator flashes on occasional peaks in signal level (8dB before clipping). Each Mic/Line Input also includes selection boxes for Enable, High Pass Filter, & Phantom Power. Enable Main allows that Mic/Line Input signal to be available for mixing to the Main Output. Enable Zone allows that Mic/Line Input signal to be available for mixing to the Zone Output. ***NOTE:*** *Enable Main & Enable Zone also affect the ability for the associated Mic/Line input to initiate 'ducking' (see Miscellaneous Screen on pg. 10).* High Pass Filter reduces the Mic/Line Input low frequency signals 6dB/octave @ 110Hz. Phantom Power turns on +24 Volt at the Mic/Line Input, for powering condenser mics. EQ provides Bass & Treble equalization (tone control) for each Mic/Line Input. Main Mic Priority selects which Mic/Line Input (if any) shall have priority over the other Mic/Line Input, at the Main Output. Zone Mic Priority selects which Mic/Line Input (if any) shall have priority over the other Mic/Line Input, at the Zone Output. ***NOTE:*** *Mic/Line Input signals are mixed to the outputs 'post-fader'. Therefore, Main/Zone Output EQ and fader settings do NOT affect Mic/Line Input signals which appear at the outputs.* The bottom of the screen shows on/off status of the eight Logic Inputs and the eight Logic Outputs. Sixteen buttons are provided for recalling non-volatile memory presets. A separate Store button provides a menu for storing settings into the sixteen memory preset locations. Presets contain settings affecting all inputs/outputs. The title bar at the top of the Mix screen shows Device #, custom Device Name, & model of product being controlled. BiampWin software can operate 'off-line' (no product connected) by opening a 'new' file for the desired product. The Device # for 'off-line' files is assigned sequentially as a negative number.

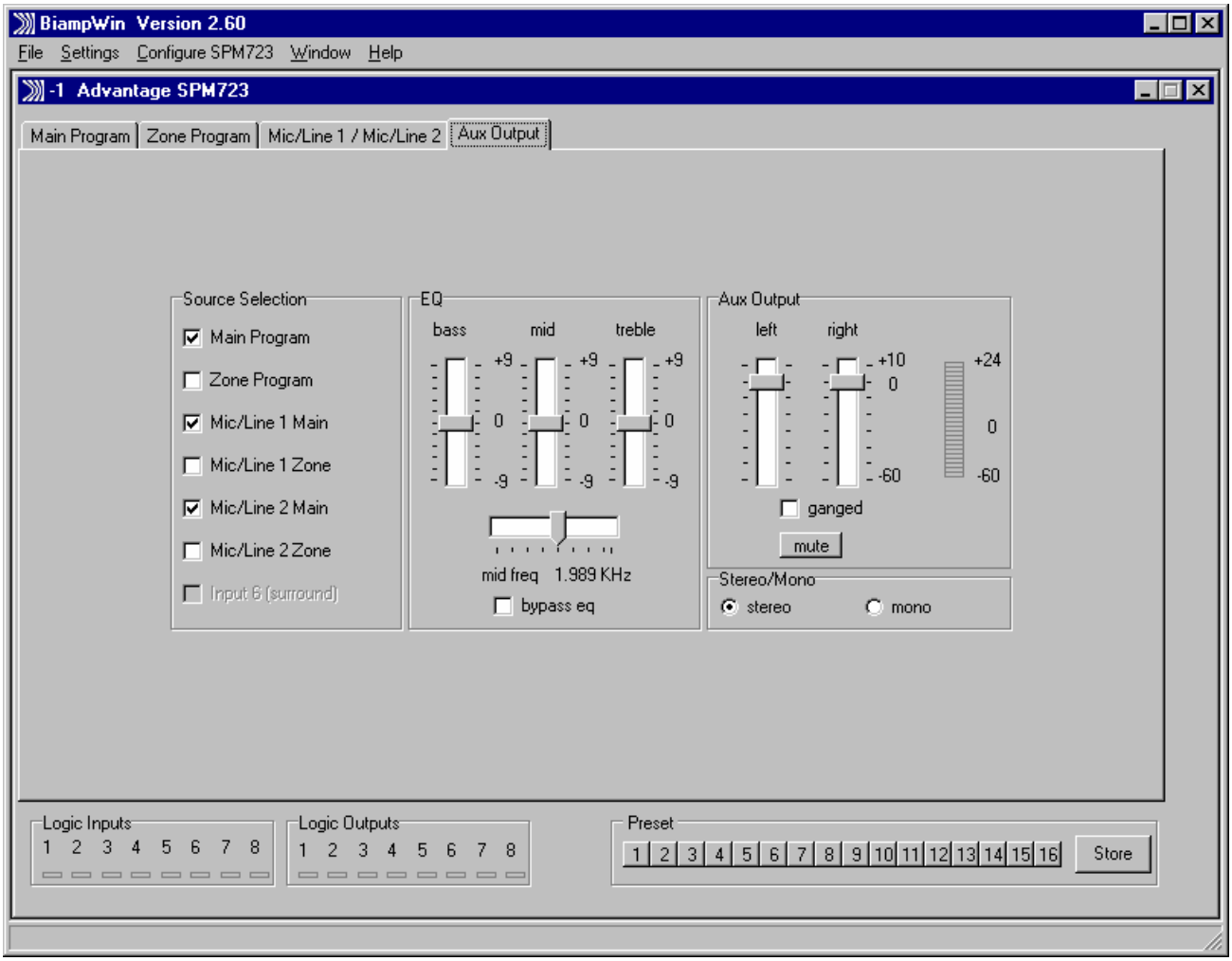

AUX OUTPUT SCREEN

The Aux Output tab on the Mix screen provides faders which can be assigned for separate left/right or stereo ganged operation, and includes a mute button, a 3-band mid-sweep EQ, and a signal level meter. In addition, the Aux Output may be switched from stereo operation to mono operation (a mono sum of the left/right signals then appears at both outputs). Unlike the Main/Zone Outputs, the Aux Output does not allow input signals to be mixed directly to it. Instead, the Aux Output only allows Source Selection of input signals, as they appear at the Main and/or Zone Outputs. ***NOTE:*** *Mic/Line Input signals are mixed to the Aux Output 'pre-fader'. Therefore, Aux Output EQ & fader settings, as well as Mic/Line EQ & fader settings, BOTH affect Mic/Line Input signals which appear at the Aux Output.* One exception to this Source Selection routine is Input 6 (Surround), which allows Input 6 to be mixed directly to the Aux Output for surround sound applications. Under these circumstances, the Input 6 faders on the Main Program screen are used instead to feed Input 6 exclusively to the Aux Output (not to the Main or Zone Outputs). The Input 6 faders on the Zone Program screen become disabled. With appropriate signals applied to Input 6, the Aux Output can then be used to provided the additional 5th & 6th (center & sub) outputs necessary for surround sound. Other inputs receive the signals representing Front L & R and Rear L & R, which would then be mixed to the Main & Zone Outputs (see Applications on pg. 21). ***NOTE:*** *To select Input 6 (Surround), it must first be enabled via the Miscellaneous Screen (see Miscellaneous Screen on pg. 10).* The bottom of the screen shows on/off status of the eight Logic Inputs and the eight Logic Outputs. Sixteen buttons are provided for recalling non-volatile memory presets. A separate Store button provides a menu for storing settings into the sixteen memory preset locations. Presets contain settings affecting all inputs/outputs. The title bar at the top of the Mix screen shows Device #, custom Device Name, & model of product being controlled. BiampWin software can operate 'off-line' (no product connected) by opening a 'new' file for the desired product. The Device # for 'off-line' files is assigned sequentially as a negative number.

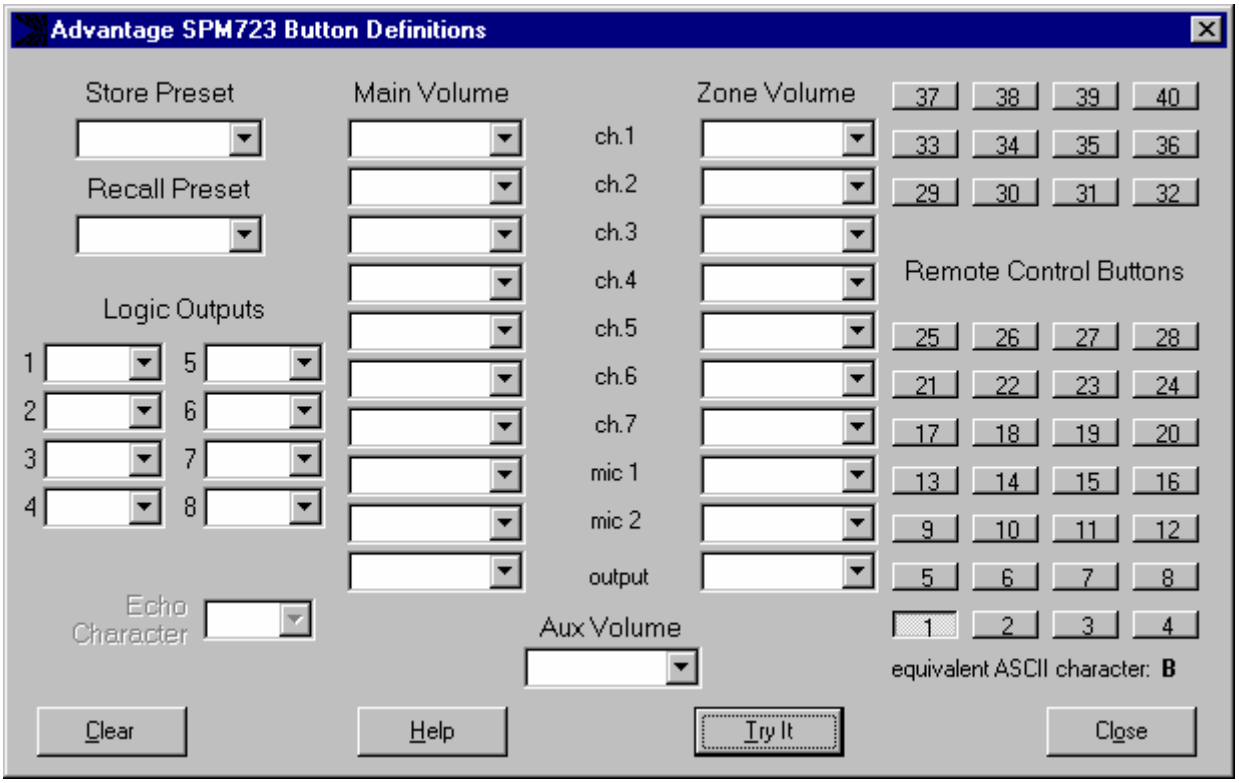

BUTTON DEFINITION SCREEN

The Button Definitions screen is accessed through the Configue SPM723 menu, and is used to assign specific 'actions' to remote control buttons. Although the SPM723 does not accept commands from push-button remote controls directly, it can receive individual ASCII characters (via RS-232) from other BIAMP products or third-party control systems. From the factory, Remote Control Buttons have equivalent ASCII characters permanently assigned to them (see RS-232 Control on pg. 16). Therefore, a Remote Control Button can be assigned specific 'actions', which the SPM723 will then perform whenever the equivalent ASCII character for that button is received. From the factory, Remote Control Buttons have no pre-programmed functions. However, using the Button Definitions screen, each Remote Control Button may be assigned various 'actions'. Remote Control Buttons selects which button is to be defined. Equivalent ASCII Character displays the permanent ASCII character for the selected button. Store Preset allows store actions for Presets 1~16 to be assigned to the selected button. Recall Preset allows recall actions for Presets 1~16 to be assigned to the selected button. Logic Outputs allows 'on', 'off', & 'toggle' actions for Logic Outputs 1~8 to be assigned to the selected button. Echo Character displays the 'echo' character for the selected button. ***NOTE:*** *Echo Characters are permanent for Remote Control Buttons, and can only be changed for Logic Inputs (see next page).* Main Volume & Zone Volume allow specific volume & muting actions for Line Inputs 1~7, Mic/Line 1 & 2, Main Output, & Zone Output to be assigned to the selected button. Aux Volume allows specific volume & muting actions for Aux Output to be assigned to the selected button. Clear allows all actions assigned to the selected button (or all buttons) to be cleared. Help provides additional instruction. Try It causes the actions currently assigned to the selected button to be performed by the SPM723. Close will close the Button Definitions screen.

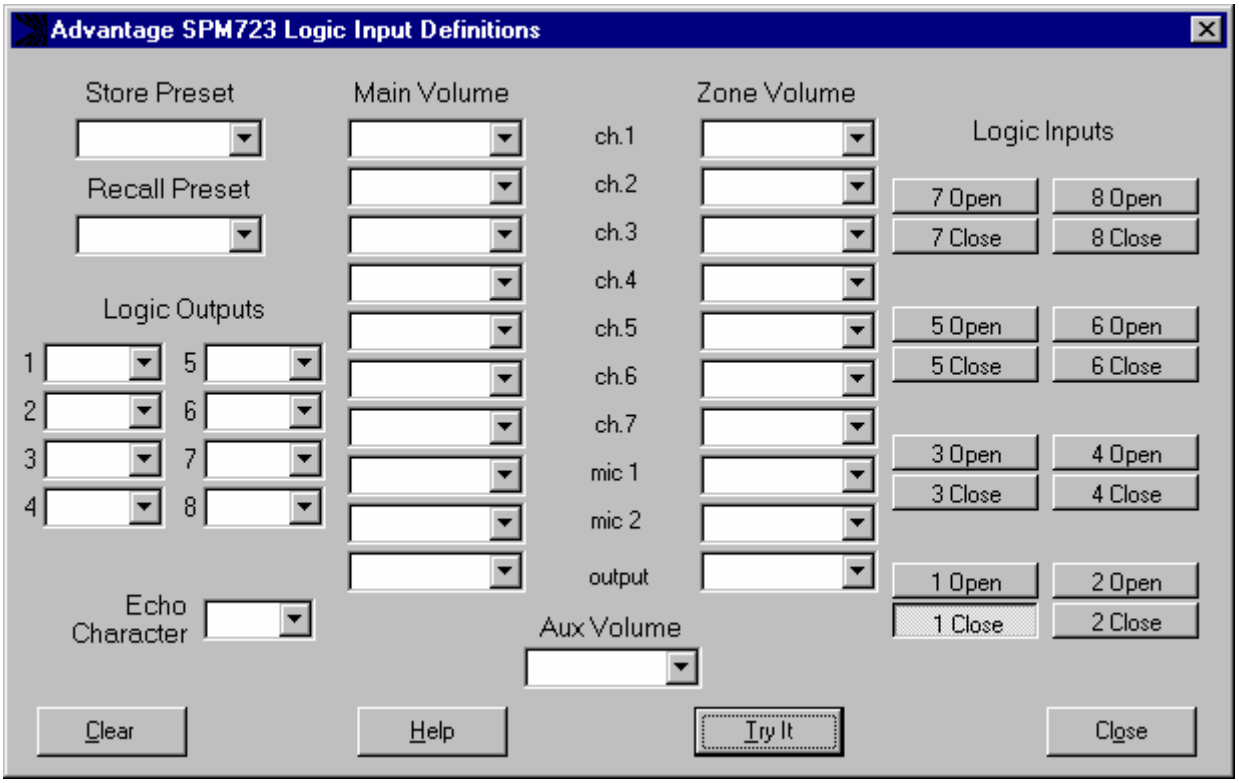

LOGIC INPUT DEFINITION SCREEN

The Logic Input Definitions screen is accessed through the Configure SPM723 menu, and is used to assign specific 'actions' to the Logic Inputs. Logic Inputs allow remote control of the SPM723 via external circuits, such as switches, contact-closures, active driver circuits, and/or 'open-collector' logic outputs (see Logic Inputs on pg. 14). From the factory, Logic Inputs 1~8 have no pre-programmed functions. However, using the Logic Input Definitions screen, each Logic Input may be assigned various 'actions'. Logic Inputs selects which Logic Input is to be defined. ***NOTE:*** *Since Logic Inputs are controlled by switches, contact-closures, etc., each Logic Input may be assigned certain actions to perform when the switch is 'opened', and different actions to perform when that same switch is 'closed'.* Store Preset allows store actions for Presets 1~16 to be assigned to the selected Logic Input. Recall Preset allows recall actions for Presets 1~16 to be assigned to the selected Logic Input. Logic Outputs allows 'on', 'off', & 'toggle' actions for Logic Outputs 1~8 to be assigned to the selected Logic Input. Echo Character allows the 'echo' character for the selected Logic Input to be changed. ***NOTE****: This is the RS-232 ASCII character which will be transmitted via the Serial Port/Link Port whenever that Logic Input is switched. From the factory, no echo characters are assigned to Logic Inputs 1~8. Changing the Echo Character is used primarily for customizing remote control commands amongst various RS-232 controlled products within a system (see RS-232 Control on pg. 16).* Main Volume & Zone Volume allow specific volume & muting actions for Line Inputs 1~7, Mic/Line 1 & 2, Main Output, & Zone Output to be assigned to the selected button. Aux Volume allows specific volume & muting actions for Aux Output to be assigned to the selected button. ***NOTE:*** *Although Logic Input volume actions include a 'repeating' (volume ramp) function, they will not continuously repeat the echo character via RS-232.* Clear allows all actions assigned to the selected Logic Input (or all Logic Inputs) to be cleared. Help provides additional instruction. Try It causes the actions currently assigned to the selected Logic Input to be performed by the SPM723. Close will close the Logic Input Definitions screen.

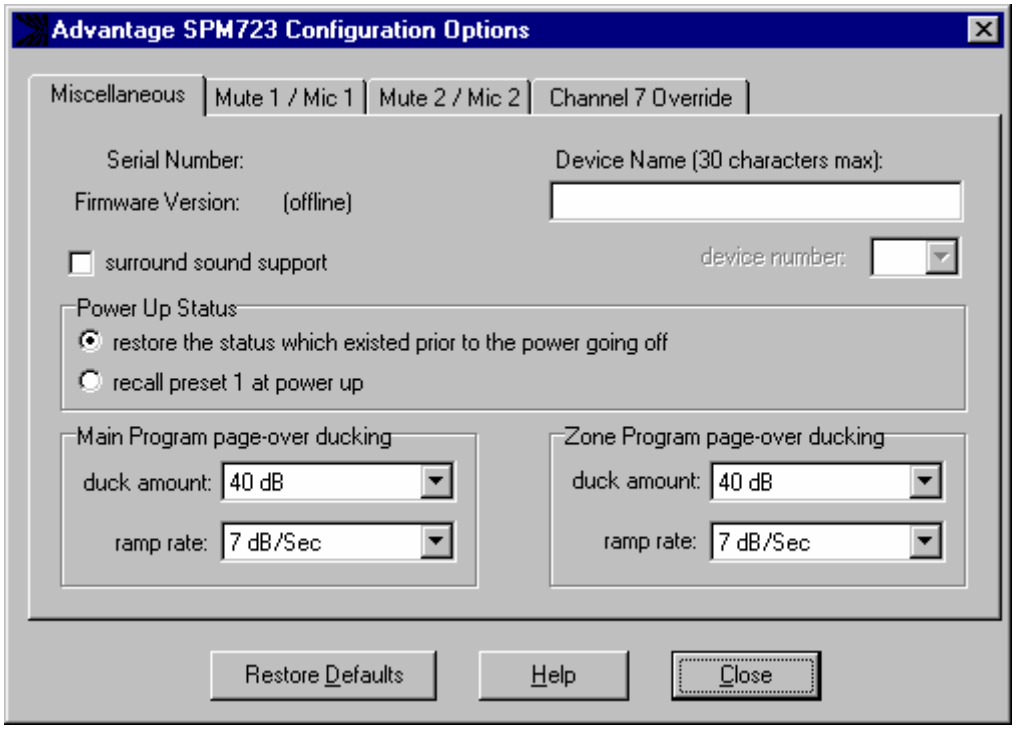

MISCELLANEOUS SCREEN

The Configuration Options screen is accessed through the Configure SPM723 menu, and the Miscellaneous tab on the Configuration Options screen is then used to select options which customize the operation of the SPM723. At the top of the Miscellaneous screen, the Serial Number and Firmware Version of the particular SPM723 will be displayed. The BiampWin software can operate 'off-line' (with no product connected) by opening a 'new' file for the desired product. The Serial Number & Firmware Version are not displayed for 'new' (off-line) files. Device Name allows a custom name to be given to the SPM723, by entering up to 30 characters of text. The Device Name will be stored in the SPM723 memory, and will be displayed on the title bar of the Mix screen whenever that SPM723 is accessed using the software. Device Number opens a drop-down menu which allows assignment of an 'address' number (0~63) to the SPM723, for computer control of multiple units. Surround Sound Support enables Input 6 source selection on the Aux screen, which allows the Aux Output to provide the additional independent outputs necessary for surround sound applications (see Aux Screen on pg. 7) Power-Up Status determines what settings the SPM723 will automatically recall whenever power is turned on. From the factory, the SPM723 is set to recall the settings which existed prior to power being shut off. Recall Preset 1 at Power Up will instead cause the SPM723 to recall this specific preset at power-up. Main Program Page-Over Ducking and Zone Program Page-Over Ducking determine the amount of attenuation applied to stereo Line Input 1~7 signals, and how quickly they return to normal level, when ducking has been triggered (see Mute on pg. 3). Duck Amount opens a drop-down menu of 41 attenuation choices (0dB~80dB). Ramp Rate opens a drop-down menu of 200 return rate choices (1dB~200dB per second). ***NOTE:*** *A Mic/Line Input must be enabled to an output before it can trigger ducking at that output (see Mic/Line Screen on pg. 6).* Restore Defaults opens a pop-up menu, which allows the Miscellaneous options (or all Configuration Options) to be set back to their factory defaults. Help provides additional instruction. Close will return you to the Mix screen.

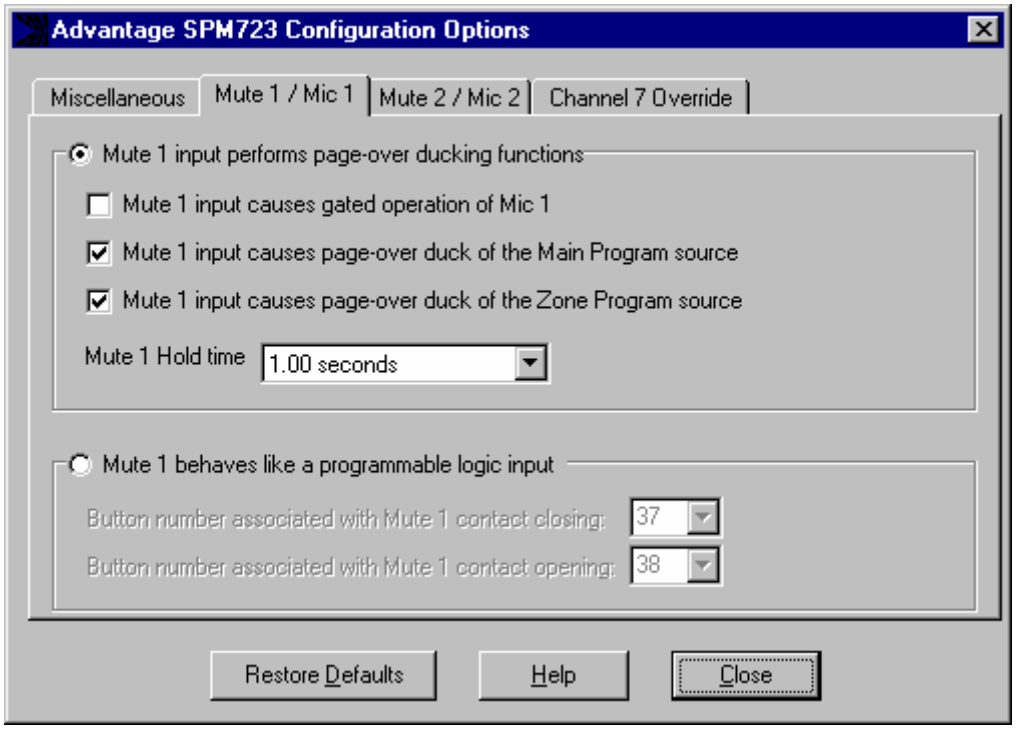

MUTE 1 / MIC 1 SCREEN

The Configuration Options screen is accessed through the Configure SPM723 menu, and the Mute 1 / Mic 1 tab on the Configuration Options screen is then used to select options which customize the function of the Mic/Line 1 Mute terminal (see Front & Rear Panel Features on pg. 3). Mute 1 Input Causes Gated Operation of Mic **1** toggles assignment of gating to the Mic/Line 1 signal. Gating allows that mic/line input signal to remain off, until triggered on either manually (via contact-closure) or automatically (via signal present) at the Mute 1 terminal. Mute 1 Input Causes Page-Over Duck of the Main Program Source toggles assignment of ducking at the Main Output. Mute 1 Input Causes Page-Over Duck of the Zone Program Source toggles assignment of ducking at the Zone Output. Ducking is a temporary attenuation of the stereo Line Input 1~7 signals at that output, which is triggered manually (via contact-closure) or automatically (via signal present) at the Mute 1 terminal. ***NOTE:*** *A Mic/Line Input must be enabled before it can trigger ducking (see Mic/Line Screen on pg. 6).* Mute 1 Hold Time opens a drop-down menu of 256 hold time choices (0~63.75 seconds). ***NOTE:*** *Hold Time determines how long mute functions remain in effect after triggering (manual or automatic) is released. Hold Time is not the same as Ramp Rate, which determines how fast a signal returns to normal after Hold Time has elapsed.* Mute 1 Behaves Like a Programmable Logic Input will disable the Mute 1 functions described above, and instead allow the Mute 1 terminal to be used as a logic input, which can then be programmed like a remote control button (see Setup on pg. 8). However, a logic input can have two 'button definitions', one for when the circuit is 'closed' (activated) and another for when the circuit is 'opened' (released). Therefore, drop-down menus of the forty possible control buttons are provided for both the 'closing' & the 'opening' of the logic input circuit. The logic input can still be triggered manually (via contact-closure) or automatically (via signal present). Restore Defaults opens a pop-up menu, which allows the Mute 1 / Mic 1 options (or all Configuration Options) to be set back to their factory defaults. Help provides additional instruction. Close will return you to the Mix screen.

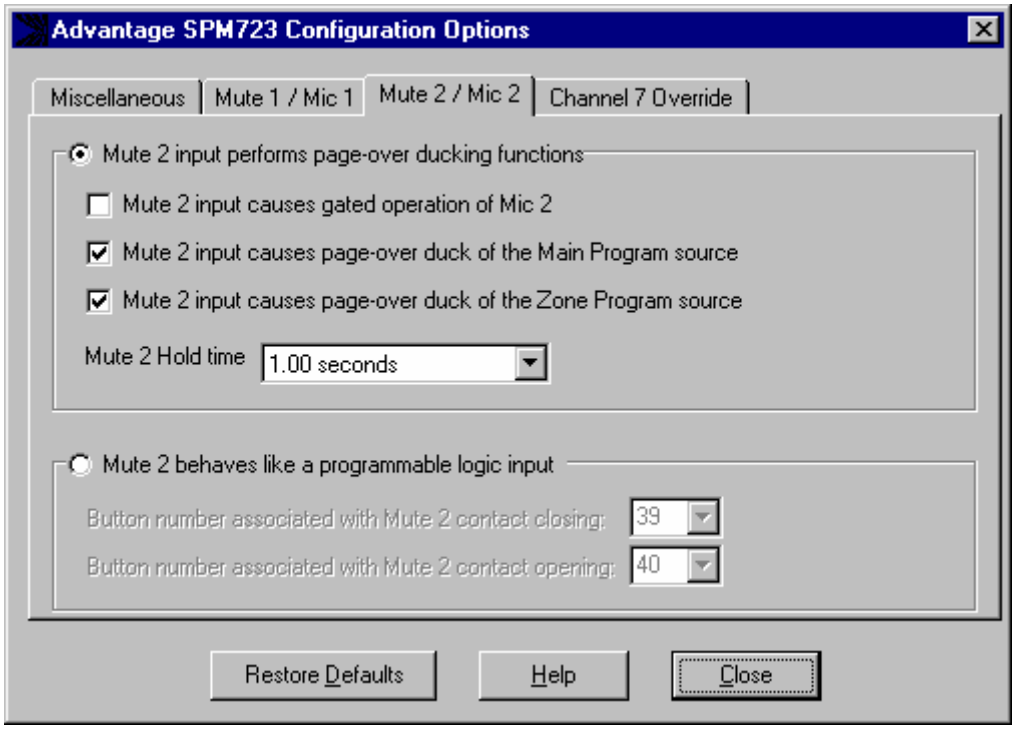

MUTE 2 / MIC 2 SCREEN

The Configuration Options screen is accessed through the Configure SPM723 menu, and the Mute 2 / Mic 2 tab on the Configuration Options screen is then used to select options which customize the function of the Mic/Line 2 Mute terminal (see Front & Rear Panel Features on pg. 3). Mute 2 Input Causes Gated Operation of Mic 2 toggles assignment of gating to the Mic/Line 2 signal. Gating allows that mic/line input signal to remain off, until triggered on either manually (via contact-closure) or automatically (via signal present) at the Mute 2 terminal. Mute 2 Input Causes Page-Over Duck of the Main Program Source toggles assignment of ducking at the Main Output. Mute 2 Input Causes Page-Over Duck of the Zone Program Source toggles assignment of ducking at the Zone Output. Ducking is a temporary attenuation of the stereo Line Input 1~7 signals at that output, which is triggered manually (via contact-closure) or automatically (via signal present) at the Mute 2 terminal. ***NOTE:*** *A Mic/Line Input must be enabled before it can trigger ducking (see Mic/Line Screen on pg. 6).* Mute 2 Hold Time opens a drop-down menu of 256 hold time choices (0~63.75 seconds). ***NOTE:*** *Hold Time determines how long mute functions remain in effect after triggering (manual or automatic) is released. Hold Time is not the same as Ramp Rate, which determines how fast a signal returns to normal after Hold Time has elapsed.* Mute 2 Behaves Like a Programmable Logic Input will disable the Mute 2 functions described above, and instead allow the Mute 2 terminal to be used as a logic input, which can then be programmed like a remote control button (see Setup on pg. 8). However, a logic input can have two 'button definitions', one for when the circuit is 'closed' (activated) and another for when the circuit is 'opened' (released). Therefore, drop-down menus of the forty possible control buttons are provided for both the 'closing' & the 'opening' of the logic input circuit. The logic input can still be triggered manually (via contact-closure) or automatically (via signal present). Restore Defaults opens a pop-up menu, which allows the Mute 2 / Mic 2 options (or all Configuration Options) to be set back to their factory defaults. Help provides additional instruction. Close will return you to the Mix screen.

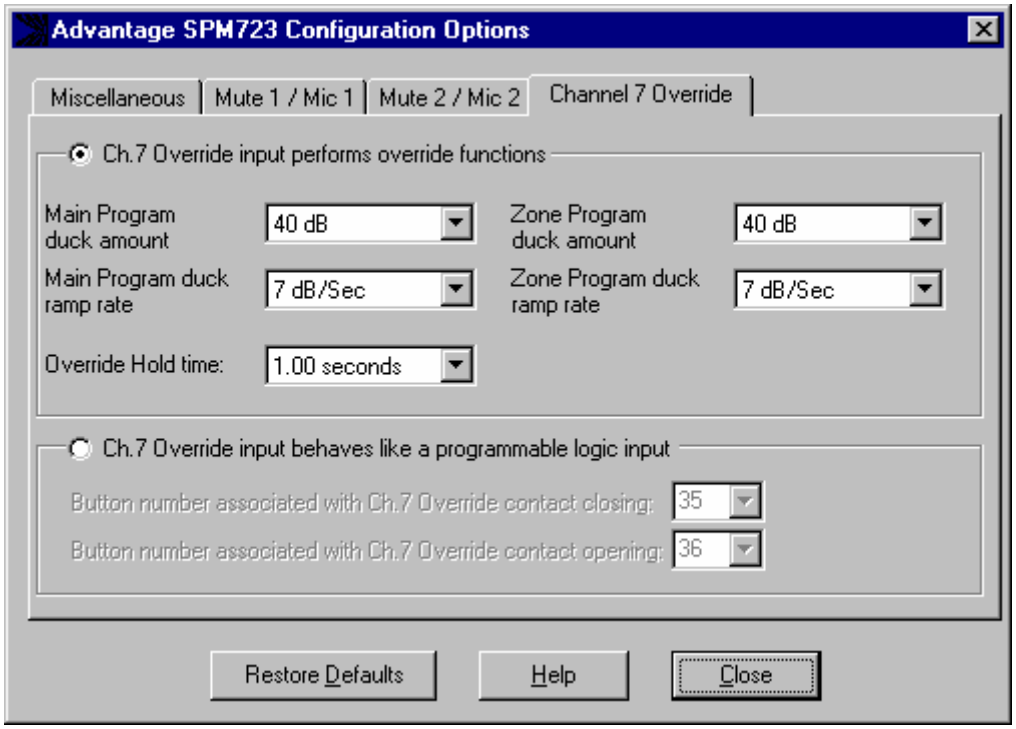

CHANNEL 7 OVERRIDE SCREEN

The Configuration Options screen is accessed through the Configure SPM723 menu, and the Channel 7 Override tab on the Configuration Options screen is then used to select options which customize the function of the Override terminal (see Front & Rear Panel Features on pg. 3). When Channel 7 Override is released, the previously selected Stereo Line Inputs for each output will again be selected. However, these signals will initially be attenuated, and will then return to their normal levels as determined by the following parameters. Main Duck Amount & Zone Duck Amount open drop-down menus of 41 attenuation choices (0dB~80dB) for the stereo Line Input signals at the associated output. Main Duck Ramp Rate & Zone Duck Ramp Rate open drop-down menus of 200 return rate choices (1dB~200dB per second) for the stereo Line Input signals at the associated output. Override Hold Time opens a drop-down menu of 256 hold time choices (0~63.75 seconds). ***NOTE:*** *Hold Time determines how long override remains in effect after triggering (manual or automatic) is released. Hold Time is not the same as Ramp Rate, which determines how fast a signal returns to normal after Hold Time has elapsed.* Ch.7 Override Input Behaves Like a Programmable Logic Input will disable the Channel 7 Override functions described above, and instead allow the Override terminal to be used as a logic input, which can then be programmed like a remote control button (see Setup on pg. 8). However, a logic input can have two 'button definitions', one for when the circuit is 'closed' (activated) and another for when the circuit is 'opened' (released). Therefore, drop-down menus of the forty possible control buttons are provided for both the 'closing' & the 'opening' of the logic input circuit. The logic input can still be triggered manually (via contact-closure) or automatically (via signal present). Restore Defaults opens a pop-up menu, which allows the Channel 7 Override options (or all Configuration Options) to be set back to their factory defaults. Help provides additional instruction. Close will return you to the Mix screen.

LOGIC INPUTS

Eight Logic Inputs are available on a rear panel 9-pin Sub-D (female) connector. Logic Inputs allow remote control of the SPM723 via external circuits, such as switches, contact-closures, active driver circuits, and/or 'open-collector' logic outputs. From the factory, Logic Inputs 1~8 have no pre-programmed function. However, each Logic Input may be assigned different 'actions' using the BiampWin software and serial cable provided with the SPM723 (see Setup on pg. 9). Since Logic Inputs are controlled by switches, contact-closures, etc., each Logic Input may be assigned two functions (one for switch 'closed' and one for switch 'open').

Logic Inputs have the following pin assignments (right-to-left & top-to-bottom**): Pins 1~8)** Logic Inputs 1~8; **Pin 9)** Ground.

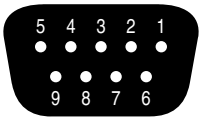

logic inputs

pin #1 = Logic Input 1
pin #2 = Logic Input 2
pin #3 = Logic Input 3
pin #4 = Logic Input 4
pin #5 = Logic Input 5
pin #6 = Logic Input 6
pin #7 = Logic Input 7
pin #8 = Logic Input 8
pin #9 = ground

When nothing is connected to a Logic Input, an internal pull-up resistor keeps it at a 'high' idle state (+5.0 VDC). The Logic Input is activated when its input goes 'low' (less than +0.8 VDC), and is de-activated when its input goes 'high' (greater than +2.4 VDC). A Logic Input is controlled in one of three ways: 1) Use an NPN style 'open-collector' logic output from an external device (such as a BIAMP PMX84 or DRC4+4) to short the Logic Input to ground. 2) Use a switch, relay, or other contact-closure (such as from a third-party controller) to short the Logic Input to ground. 3) Use an active TTL output driver circuit (such as from a third-party controller) to actively drive the Logic Input to a 'high' or 'low' state.

Multiple contact-closures or 'open-collector' logic outputs may be wired in parallel to a single Logic Input (see diagram below). Logic Outputs and contact-closures should be rated for at least 5 Volts / 1mA operation. Low-current / dry-contact closures are recommended for reliability. Active output driver circuits should not exceed a signal range of 0~5 Volts DC, and should have a minimum pulse width of 100 milli-seconds. Logic Input impedances are approximately 10k ohms.

multiple switches to single Logic Input

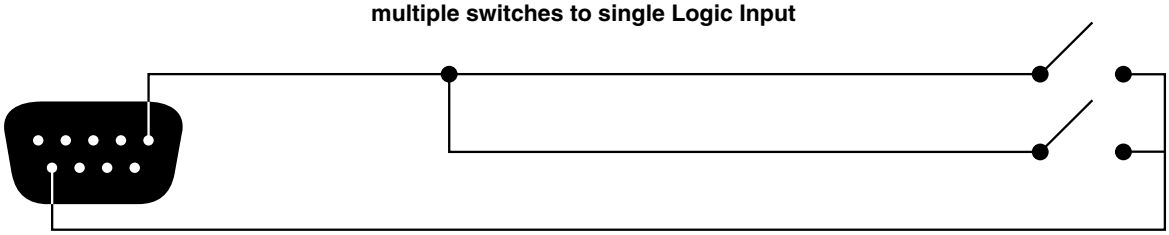

LOGIC OUTPUTS

The SPM723 provides eight logic outputs on a rear panel 9-pin Subminiature D (male) connector. Logic Outputs can be used to control external circuits such as relays, indicators, etc. (see diagrams below). However, the SPM723 Logic Outputs are most often used to provide simultaneous audio & video source selection, by controlling an external video switching device which has logic inputs or other means of control via external contact-closures (logic outputs). Multiple Logic Outputs may be combined (wired in parallel) to control a single circuit.

The SPM723 Logic Outputs are 'open collector' outputs. Each Logic Output is an NPN transistor with the collector being the output and the emitter being ground (see diagram below). When a Logic Output is turned on, the transistor provides a path for DC current to flow. The Logic Outputs do not provide any voltage or current. They act only as switches (with a common ground return). To activate external relays, an external power supply must be used (see diagram below). The Logic Output transistors are rated up to a maximum of 24 VDC and 50 mA per output (24 volt relay coils maximum). However, +12 Volts DC is sufficient power for most applications. When using the Logic Outputs to control relays, protection diodes must be used to suppress high voltage transients that are generated when the relays turn off (see diagram below). Any of the 1N4004 family of diodes (1N4001, 1N4002, 1N4003, 1N4004, 1N4005, 1N4006, 1N4007, or equivalent) will provide proper protection. When a Logic Output goes on, the associated relay may be wired to perform on, off, or 'A/B' switching functions. To use logic 'on' to turn on (or activate) a device, wire across the 'normally open' relay contacts, in series with the device (or control voltage source). To use logic 'on' to select between 'A' or 'B' signals (inputs or outputs), wire one signal to the 'normally closed' relay terminal and the other signal to the 'normally open' relay terminal, with the common relay terminal providing the feed (input or output).

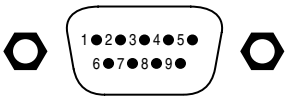

logic outputs

logic out	pin number
Logic Out 1	pin #1
Logic Out 2	pin #2
Logic Out 3	pin #3
Logic Out 4	pin #4
Logic Out 5	pin #5
Logic Out 6	pin #6
Logic Out 7	pin #7
Logic Out 8	pin #8
ground	pin #9

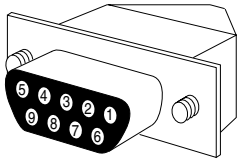

9-pin cable-end

Logic Output Controlling Relay

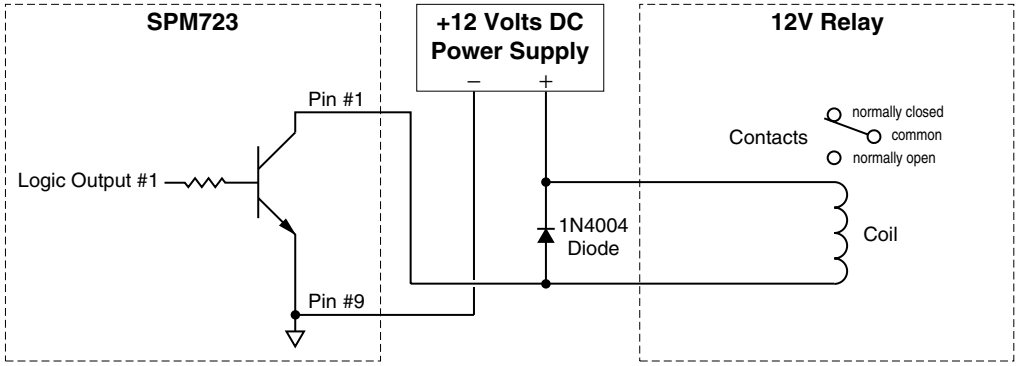

Logic Output Controlling LED Indicator

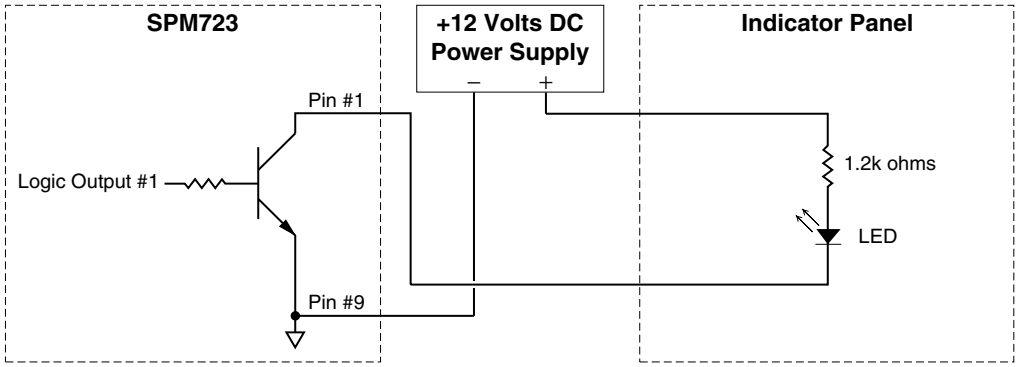

RS-232 CONTROL

The SPM723 has an RS-232 Serial Port, which allows it to be controlled by a computer (see Front & Rear Panel Features on pg. 2). In addition to the BiampWin software, the SPM723 offers two other methods of computer control.

Control Button Emulation: This method allows the computer to imitate the operation of an infrared transmitter or wall-mount control panel. Although the SPM723 does not accept infrared or wall-mount remote controls itself, it can still receive ASCII characters (via RS-232) which emulate the buttons on these types of remote controls. From the factory, remote control buttons have equivalent ASCII characters permanently assigned to them (see table below). Therefore, actions can be assigned to remote control buttons in the same way they are assigned to Logic Inputs. Then, using this method, the computer can output ASCII characters which are equivalent to the commands generated by those standard remote control buttons. Control Button Emulation allows the computer to utilize up to forty button definitions (unlike standard remote controls, which have only twenty-eight buttons).

Advanced Computer Control: This method provides advanced commands, which allow the computer to retrieve or edit various SPM723 settings. The computer may also emulate control buttons. Using this method, the computer may designate up to sixty-four devices, and may also provide 'real-time' display of various settings.

This manual only describes the Control Button Emulation method of computer control. For details regarding Advanced Computer Control, please download the SPM723 Computer Control manual (723host.PDF) from the 'resources' page of our web site (www.biamp.com).

Each control button on an infrared transmitter or wall-mount control panel corresponds to one character in the standard ASCII character set. The character equivalents are summarized in the following table. This table includes all forty possible buttons, their button numbers, their ASCII code equivalents, and their factory default button definitions (no operation assigned).

button 01	B	no operation assigned	button 15	P	no operation assigned	button 29	^	no operation assigned
button 02	C	no operation assigned	button 16	Q	no operation assigned	button 30	_	no operation assigned
button 03	D	no operation assigned	button 17	R	no operation assigned	button 31	'	no operation assigned
button 04	E	no operation assigned	button 18	S	no operation assigned	button 32	b	no operation assigned
button 05	F	no operation assigned	button 19	T	no operation assigned	button 33	c	no operation assigned
button 06	G	no operation assigned	button 20	U	no operation assigned	button 34	d	no operation assigned
button 07	H	no operation assigned	button 21	V	no operation assigned	button 35	e	no operation assigned
button 08	I	no operation assigned	button 22	W	no operation assigned	button 36	f	no operation assigned
button 09	J	no operation assigned	button 23	X	no operation assigned	button 37	g	no operation assigned
button 10	K	no operation assigned	button 24	Y	no operation assigned	button 38	h	no operation assigned
button 11	L	no operation assigned	button 25	Z	no operation assigned	button 39	i	no operation assigned
button 12	M	no operation assigned	button 26	[	no operation assigned	button 40	j	no operation assigned
button 13	N	no operation assigned	button 27	\	no operation assigned			
button 14	O	no operation assigned	button 28	]	no operation assigned			

The computer can initiate any functions or actions that a standard control can, by simply transmitting the equivalent control button ASCII character. When interfacing the SPM723 to a computer, the computer must be aware that the SPM723 will 'echo' all characters it receives (both from computer and Logic Inputs) via the Serial Port Transmit Data (TXD) output signal. However, from the factory, the SPM723 Logic inputs are programmed with no 'echo character' assigned to them.

Serial Port: The 9-pin Sub-D (male) connector on the SPM723 rear panel provides the RS-232 compatible serial interface signals used for computer control. The SPM723 Serial Port transmits serial data on pin 3 (TxD), receives serial data on pin 2 (RxD), and provides a ground on Pin 5. The Data Terminal Ready (DTR) & Request To Send (RTS) output signals are connected to the +12 Volt power supply (through a resistor) and are always asserted when the SPM723 power is on. ***NOTE:*** *The Serial Port may also transmit commands which are received via the Logic Inputs, depending upon the echo character assignments (see Setup on pg. 9).*

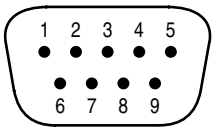

pin #1 = not used
pin #2 = Receive Data (RxD) input
pin #3 = Transmit Data (TxD) output
pin #4 = Data Terminal Ready (DTR) output
pin #5 = ground
pin #6 = not used
pin #7 = Request To Send (RTS) output
pin #8 = not used
pin #9 = not used

serial port

The SPM723 only requires receive data (pin 2), transmit data (pin 3), and signal ground (pin 5) to be connected for successful data communications (see cable diagram below). However, the PC may require that signals be present on the data set ready, clear to send, or carrier detect inputs, as well as the receive data, transmit data, and signal ground pins. Success or failure depends entirely on the actual computer hardware and software being used. When trying to solve an interfacing problem, the most important thing to remember is that an output of one device should connect to one or more inputs of the other device, and that two outputs should never be connected together. Also, keep in mind that the RS-232 specification calls for the cable length to be no greater than 50 feet (although it is not unusual to be able to operate over distances of 150 to 250 feet), and the connectors must be of the appropriate gender (male or female) to mate properly. For best results, a shielded cable should be used, with the shield connected to chassis ground. Since the SPM723 serial interface ground is also tied (indirectly) to the analog signal ground, undesirable ground loops may occur when the SPM723 is connected to a PC (if the system grounding is not carefully designed). For best performance, the PC ground and the chassis ground of the SPM723 should be at the same potential, and the PC should get AC power from the same source as the SPM723 (and any other audio equipment which is connected to the SPM723). Since most lap-top computers are isolated from earth ground, this should rarely pose a problem.

Serial Port Data Communications Parameters: The SPM723 communicates through the Serial Port at the factory default rate of 38400 bits per second, with 8 data bits, 1 stop bit, and no parity. The SPM723 utilizes a subset of the standard 7-bit ASCII character set. The eighth data bit of each character (the most significant bit) should always be 0. The computer should not echo the characters it receives. The computer should not be set for either hardware (DTR) or software (XON/XOFF) flow control. The baud rate may be changed to either 2400, 9600, or 19200 bits per second by means of the software (see Setup on pg. 4). ***NOTE:*** *Baud rate may need to be changed when the SPM723 is being used in RS-232 systems with other products having a lower maximum baud rate.*

Link Port Connections: The 9-pin Sub-D (female) connector on the SPM723 rear panel provides the RS-232 compatible serial interface signals used for linking multiple BIAMP® products within a system. The Link Port of one device simply connects to the Serial Port of the next device, and so forth (see diagram below). Link cables are available as an option (Biamp #909-0057-00). ***NOTE:*** *All but the final device in a system should have its '<u>Link</u>' switch pressed in (see Front & Rear Panel Features on pg. 2). The Link Port may also transmit commands which are received via the Logic Inputs, depending upon the echo character assignments (see Setup on pg. 9).*

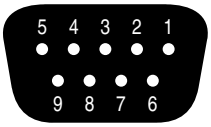

pin #1 = not used
pin #2 = Transmit Data (TxD) output
pin #3 = Receive Data (RxD) input
pin #4 = not used
pin #5 = ground
pin #6 = not used
pin #7 = not used
pin #8 = not used
pin #9 = not used

link port

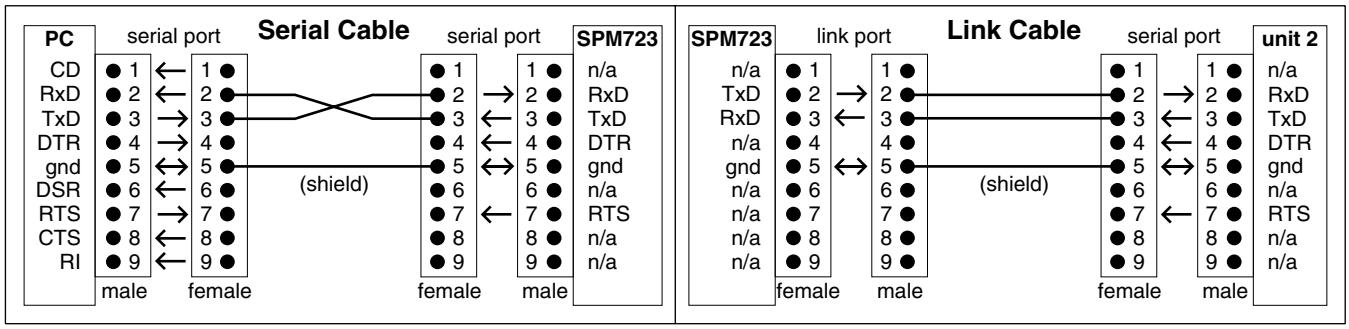

SPECIFICATIONS & BLOCK DIAGRAM

SPECIFICATIONS

Frequency Response (20Hz-20kHz @ +4dBu):	+0/-0.5dB
THD + Noise (20Hz-20kHz @ +4dBu):	< 0.05%
Output Noise (20Hz-20kHz @ nominal levels):	< -73dBu
Equivalent Input Noise (20Hz-20kHz, 150Ω @ Mic/Line Input):	-127dBu
Maximum Gain (Mic/Line Input to Main/Zone Outputs):	75dB
Input Trim Gain Range:	
Mic/Line Inputs	+60dB to -6dB
Input Impedance:	
Mic/Line Inputs (balanced)	6.6k ohms
Stereo Line Inputs 1~6 (unbalanced)	10k ohms
Line Input 7 (stereo/unbalanced)	10k ohms
Line Input 7 (mono/balanced)	20k ohms
Maximum Input:	
Mic/Line Inputs (balanced)	+24dBu
Stereo Line Inputs 1~6 (unbalanced)	+18dBu
Line Input 7 (stereo/unbalanced – mono/balanced)	+18dBu
Output Impedance:	
Main Output (balanced)	200 ohms
Zone Output (balanced)	200 ohms
Aux Output (balanced)	200 ohms
Maximum Output:	
Main Output (balanced)	+24dBu
Zone Output (balanced)	+24dBu
Aux Output (balanced)	+24dBu
Phantom Power (Mic/Line Inputs only):	+24 Volts DC
Power Requirements:	110/220VAC 50/60Hz
Power Consumption:	27 Watts max.
Dimensions:	
height (1 rack space)	1.75 inches (89mm)
width	19 inches (483mm)
depth	11 inches (191mm)
Weight:	< 10 lbs. (3.86kg)

SPM723 Block Diagrm

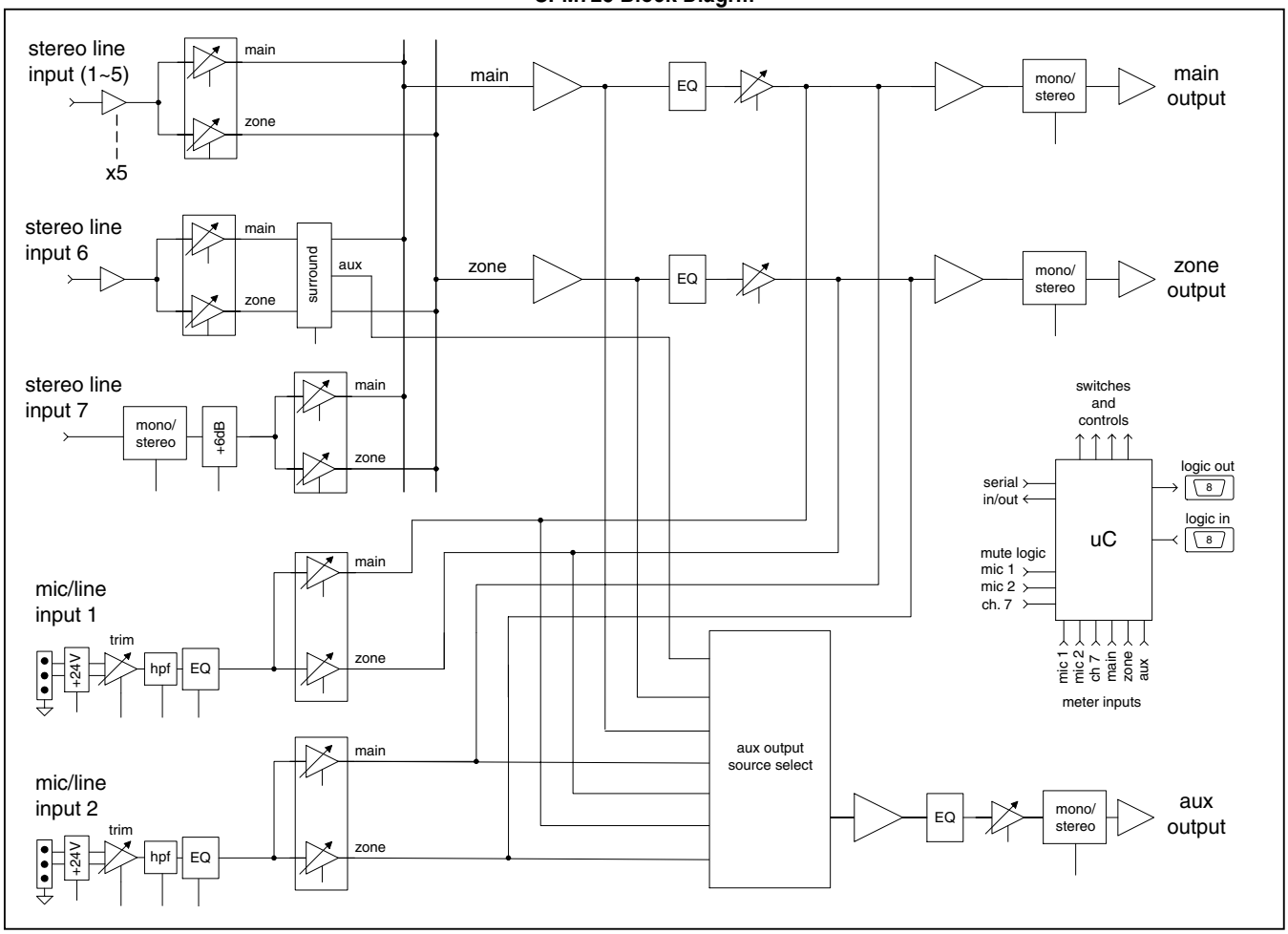

WARRANTY

BIAMP SYSTEMS IS PLEASED TO EXTEND THE FOLLOWING 5-YEAR LIMITED WARRANTY TO THE ORIGINAL PURCHASER OF THE PROFESSIONAL SOUND EQUIPMENT DESCRIBED IN THIS MANUAL

1. BIAMP Systems warrants to the original purchaser of new products that the product will be free from defects in material and workmanship for a period of 5 YEARS from the date of purchase from an authorized BIAMP Systems dealer, subject to the terms and conditions set forth below.

2. If you notify BIAMP during the warranty period that a BIAMP Systems product fails to comply with the warranty, BIAMP Systems will repair or replace, at BIAMP Systems' option, the nonconforming product. As a condition to receiving the benefits of this warranty, you must provide BIAMP Systems with documentation that establishes that you were the original purchaser of the products. Such evidence may consist of your sales receipt from an authorized BIAMP Systems dealer. Transportation and insurance charges to and from the BIAMP Systems factory for warranty service shall be your responsibility.

3. This warranty will be VOID if the serial number has been removed or defaced; or if the product has been altered, subjected to damage, abuse or rental usage, repaired by any person not authorized by BIAMP Systems to make repairs; or installed in any manner that does not comply with BIAMP Systems' recommendations.

4. Electro-mechanical fans, electrolytic capacitors, and normal wear and tear of items such as paint, knobs, handles, and covers are not covered under this warranty.

5. THIS WARRANTY IS IN LIEU OF ALL OTHER WARRANTIES, EXPRESS OR IMPLIED. BIAMP SYSTEMS DISCLAIMS ALL OTHER WARRANTIES, EXPRESS OR IMPLIED, INCLUDING, BUT NOT LIMITED TO, IMPLIED WARRANTIES OF MERCHANTABILITY AND FITNESS FOR A PARTICULAR PURPOSE.

6. The remedies set forth herein shall be the purchaser's sole and exclusive remedies with respect to any defective product.

7. No agent, employee, distributor or dealer of Biamp Systems is authorized to modify this warranty or to make additional warranties on behalf of Biamp Systems. statements, representations or warranties made by any dealer do not constitute warranties by Biamp Systems. Biamp Systems shall not be responsible or liable for any statement, representation or warranty made by any dealer or other person.

8. No action for breach of this warranty may be commenced more than one year after the expiration of this warranty.

9. BIAMP SYSTEMS SHALL NOT BE LIABLE FOR SPECIAL, INDIRECT, INCIDENTAL, OR CONSEQUENTIAL DAMAGES, INCLUDING LOST PROFITS OR LOSS OF USE ARISING OUT OF THE PURCHASE, SALE, OR USE OF THE PRODUCTS, EVEN IF BIAMP SYSTEMS WAS ADVISED OF THE POSSIBILITY OF SUCH DAMAGES.

Biamp Systems
10074 S.W. Arctic Drive
Beaverton, Oregon 97005
(503) 641-7287

Declaration of Conformity

Biamp Systems, Inc., as the manufacturer, hereby declares that the following described product, in our delivered version, complies with the provisions of the DIRECTIVES except as noted herein. In case of alteration of the product, not agreed upon or directed by us, this declaration is no longer valid.

Product Model: ADVANTAGE® SPM723
Product Description: Digitally Controlled Stereo Preamp/Mixer

Applicable EC Directives: EMC Directive (89/336/EEC), LVD Directive (73/23/EEC)

Applicable Harmonized Standards: EN55103-1 emissions EN55103-2 immunity EN60065 safety

Special Considerations for Product Environment or Compliance:

Shielded cabling must be used for system connections. The apparatus is deemed incapable of producing harmonic emissions or flicker levels sufficient enough to interfere with other apparatus as noted in EN61000-3-2 and EN61000-3-3.

This apparatus operates from a removeable external power source at voltages below the levels encompassed by the LVD. The external power source complies with the applicable requirements of EN60065. The apparatus itself is outside of the scope of the LVD and presents no hazardous voltages, as defined in the LVD. For compliance, the apparatus shall be powered only from the separate CE marked Biamp Systems power source.

RF interference conducted through interconnect cabling may cause varying degrees of random signal degradation. The effect of increased noise or distortion due to this interference is typically masked by the desired signal. In no instance is operation inhibited.

The Technical Report/File is maintained at:

Biamp Systems, Inc.
10074 S.W. Arctic Drive
Beaverton, OR USA 97005
phone: (503) 641-7287 fax: (503) 626-0281
e-mail: biamp@biamp.com

Authorized Representative: Steven Hedgepeth

Authorized Representative Signature:
Issued: June, 2000

SAFETY INFORMATION

The words WARNING and CAUTION throughout the manual, and on the device, call attention to important safety information. These words have the following meanings.

WARNING: The related information alerts you to conditions that could result in serious injury or damage to property if the instructions are not followed properly.

CAUTION: The related information instructs you on how to prevent damage to the equipment or how to avoid conditions that could result in minor injury if proper steps are not followed.

Product labelling and the operation manual may use the internationally recognized symbols defined below to note safety messages.

The lightning flash with arrowhead symbol, enclosed within a triangle, is intended to alert the user to the presence of uninsulated "dangerous voltage" within the apparatus's enclosure or at connection terminals that may be of sufficient magnitude to constitute a risk of electrical shock.

The exclamation point, enclosed within a triangle, is intended to alert the user to important installation, operation, and maintenance (servicing) instructions in the literature accompanying the apparatus.

WARNING: TO REDUCE THE RISK OF FIRE OR ELECTRICAL SHOCK, DO NOT EXPOSE THIS APPARATUS TO RAIN OR MOISTURE.

CAUTION: Installation of this apparatus should be made by a qualified installation person and should conform to all applicable local codes.

Modification and optional equipment information referenced in this manual is for use by qualified installation and service personnel only.

CAUTION

RISK OF ELECTRICAL SHOCK. DO NOT OPEN.

CAUTION: TO REDUCE THE RISK OF ELECTRICAL SHOCK, DO NOT REMOVE COVER.

NO USER-SERVICEABLE PARTS INSIDE.

REFER SERVICING TO QUALIFIED SERVICE PERSONNEL.

"INFORMACIÓN DE SEGURIDAD"

Las palabras **PELIGRO** (WARNING) y **PRECAUCIÓN** (CAUTION) a lo largo del manual y en el dispositivo (sistema), llaman la atención acerca de una importante información de seguridad. Estas palabras tienen los siguientes significados :

PELIGRO (WARNING) : la información relata las condiciones en que podría ser dañada seriamente la propiedad si no se siguen adecuadamente las instrucciones.

PRECAUCIÓN (CAUTION) : la información que se relata te instruye en cómo prevenir daños al equipo o como evitar condiciones que podrían resultar en perjuicio menor si los pasos adecuados no son seguidos correctamente.

El etiquetado del producto y el manual de operación pueden hacer uso de los símbolos reconocidos internacionalmente y cuyos mensajes estan definidos a continuación para modificar mensajes de seguridad:

El símbolo del rayo encerrado en un triángulo pretende alertar al usuario de la presencia de un peligroso voltaje no aislado ,dentro de la caja del aparato o a un terminal de conexión y que podría ser de suficiente magnitud como para constituir un grave riesgo de descarga eléctrica.

El punto de exclamación dentro de un triángulo pretende alertar al usuario de la importancia de las instrucciones de instalación, operación y mantenimiento (servicio) que acompañan al aparato.

PELIGRO (WARNING) : para reducir el riesgo de fuego o una descarga electrica, no exponer este aparato a la lluvia o la humedad.

PRECAUCIÓN (CAUTION) : la instalación de este aparato debería hacerse por una persona cualificada en la instalación, y debería conformar todos los códigos locales aplicables.

La modificación y la información opcional del equipo referenciada en este manual es para ser utilizada únicamente por personal cualificado en instalación y servicio.

PRECAUCIÓN

RIESGO DE DESCARGA ELÉCTRICA NO ABRIR.

PRECAUCIÓN: para reducir el riesgo de descarga eléctrica no levantar la tapa.

NO EXISTEN COMPONENTES DE SERVICIO EN EL INTERIOR.

REFERIRSE ÚNICAMENTE A PERSONAL CUALIFICADO PARA SERVICIO TECNICO.

INFORMATION CONCERNANT VOTRE SECURITE

Les mots **WARNING** et **CAUTION** dans le manuel d'utilisation et sur les appareils attirent votre attention sur les plus importantes informations concernant votre sécurité. Ces mots ont la signification suivante:

WARNING: Ce mot vous indique les circonstances dans lesquelles vous pourriez être blessé ou endommager votre équipement si les instructions ne sont pas suivies correctement.

CAUTION: Ce mot vous indique comment éviter d'endommager votre matériel et comment éviter de vous blesser si vous ne suivez pas les instructions.

Vous trouverez peut-être les symboles suivants sur votre appareil ou dans le manuel d'utilisation.

L'éclair se terminant en flèche dans un triangle permet de prévenir l'utilisateur d'un voltage dangereux non isolé dans l'appareil ou d'une connexion d'une amplitude suffisante pour constituer un risque de choc électrique.

Le point d'exclamation dans un triangle permet de prévenir l'utilisateur des points importants concernant l'installation, le fonctionnement et l'entretien de l'appareil figurant dans le manuel d'utulisation.

WARNING: POUR REDUIRE LES RISQUES DE FEU OU DE CHOC ELECTRIQUE, NE PAS METTRE L'APPAREIL SOUS LA PLUIE OU DANS L'HUMIDITE.

CAUTION: L'installation de cet appareil doit être faite par un installateur qualifié et doit être en conformité avec toutes les lois locales en application.

Les informations concernant une modification ou un équipement en option dans le manuel doivent être effectué par du personnel qualifié.

ATTENTION:

Risque de choc électrique, ne pas enlever le couvercle.

ATTENTION: L'entretien des pièces intérieures ne peut pas être fait par des personnes non qualifiées.

Faire faire l'entretien uniquement par du personnel qualifié.

INFORMAZIONI PER LA SICUREZZA

Le parole **AVVERTENZA** (WARNING) e **PRUDENZA** (CAUTION) poste sul manuale d'uso e sul apparato richiamano la vostra attenzione su delle importanti informazioni per la vostra sicurezza. Queste parole hanno il seguente significato.

AVVERTENZA: (WARNING) La suddetta indicazione vi avvisa sul rischio di incorrere in danni a cose o a persone ,se le procedure d'uso e installazione non saranno seguite propriamente.

PRUDENZA: (CAUTION) La suddetta indicazione vi instruisce su come prevenire e ridurre al minimo, il rischio di danni agli apparati e alle persone se le instruzioni saranno seguite propriamente.

Le apparecchiature e i manuali di instruzioni riporteranno la simbologia standard raffigurata qui sotto ,accompagnate dalle relative informazioni per la sicurezza.

La simbologia con il fulmine all'interno di un triangolo, intende avvisare l'utente della presenza di alto volaggio all'interno del apparecchio in questione, e che il suddetto apparecchio si alimenta attraverso una tensione di rete ad alto voltaggio e che dunque si potrebbe incorrere sul rischio di una possibile scossa elettrica.

La simbologia con il punto esclamativo all'interno di un triangolo, intende avvisare l'utente di una serie di instruzioni contenute nel manuale d'uso riguardanti : operato,manutenzione e assistenza. Il suddetto manuale sarà a corredo dell'apparecchio.

AVVERTENZA: (WARNING) PER RIDURRE IL RISCHIO DI POSSIBILI INCENDI O SCOSSE ELECTTRICHE ,SCONSIGLIAMO DI ESPORRE L'APPARECCHIO ALLA PIOGGIA O ALL'UMIDITA'.

PRUDENZA: (CAUTION) l'Installazione di questo apparato dovrà essere effettuata solo da personale qualificato e il tipo di installazione dovrà essere in regola con le norme vigenti locali..

Modifiche e ulteriori informazioni specificate in questo manuale sono solamente riservate al personale qualificato all'installazione.

Attenzione

Pericolo di scosse elettriche. Non aprire l'apparecchio.

PRUDENZA: a scopo di ridurre la possibilità di incorrere in scosse elettriche ,vi consigliamo di non rimuovere il coperchio di chiusura dell'apparecchio.

Nessuna parte di manutenzione all'interno dell'apparecchio !

Per ogni necessità di servizio e manutenzione rivolgersi al personale qualificato.

Sicherheitshinweise

Die Bergriffe **WARNUNG** (engl. WARNING) und **ACHTUNG** (engl. CAUTION) in der Bedienungsanleitung und auf den Geräten machen auf wichtige Sicherheitsinformationen aufmerksam. Diese Begriffe haben die folgende Bedeutung:

WARNUNG: (WARNING) Der folgende Text warnt Sie vor ernsthaften Verletzungen oder Beschädigungen, die aus einer fehlerhaften Bedienung bzw. Handhabung des Gerätes resultieren können.

ACHTUNG: (CAUTION) Der folgende Text informiert Sie über Bedienungshinweise zum Schutz Ihres Gerätes oder weist auf mögliche Schäden hin, wenn die Bedienungshinweise nicht beachtet werden.

Die Beschriftung der Geräte und die Bedienungsanleitungen weisen unter Umständen international bekannte Symbole auf, die die folgende Bedeutung haben:

Das Blitzsymbol im Dreieck warnt vor anliegender, nicht isolierter „gefährlicher Spannung" im Inneren oder an den Anschlüssen des Gerätes. Die Berührung der unter Spannung stehenden Teile kann zu einem elektrischen Schock führen.

Das Rufzeichen im Dreieck macht auf wichtige Installations-, Bedienungs- und Servicehinweise in der zugehörigen Bedienungsanleitung aufmerksam.

WARNUNG: (WARNING) Zur Minderung des Risikos von Feuer und elektrischem Schock schützen Sie das Gerät vor Regen und Feuchtigkeit.

ACHTUNG: (CAUTION) Die Installation des Gerätes sollte nur durch qualifiziertes Personal durchgeführt werden und muß den jeweiligen Bestimmungen entsprechen.

Die Modifikationen und die Informationen zu den optionalen Erweiterungen in der Bedienungsanleitung sind nur für qualifiziertes Personal bestimmt.

ACHTUNG
Risiko von elektrischem Schock
Gerät nicht öffnen

Achtung: Zur Minderung des Risikos von elektrischem Schock das Gerät nicht öffnen

Keine Bedienungselemente im Inneren des Gerätes

Service nur durch qualifiziertes Personal durchführen lassen

Sikkerhedsinformation

Ordene ***ADVARSEL*** (WARNING) og ***FORSIGTIG*** (CAUTION), brugt i henholdsvis brugervejledning og på selve produktet, indikerer, at vigtig information omkring sikkerhed følger. Ordene betyder følgende:

ADVARSEL: (WARNING) Den efterfølgende information advarer Dem om forhold, der kan føre til alvorlige ulykker og ejendomsskader, hvis ikke vejledningen følges.

FORSIGTIG: (CAUTION) Den efterfølgende information vejleder Dem i, hvordan De undgår skade på produktet, samt undgår forhold der kan føre til mindre ulykker og ejendomsskader, hvis ikke vejledningen følges.

Produktetiketter og brugervejledning kan indeholde de internationalt anerkendte symboler der er vist nedenfor:

Trekanten med et lyn i midten har til hensigt at advare brugeren om, at produktet indeholder "farlig spænding", og at det derfor er forbundet med fare for elektrisk stød at åbne produktet.

Trekanten med udråbstegn har til hensigt at advare brugeren om, at vigtig information omkring installation, brug, service og vedligeholdelse af produktet er indeholdt i den medfølgende brugervejledning.

ADVARSEL: (WARNING) Med henblik på at reducere risikoen for brand eller elektrisk stød, må produktet ikke udsættes for regn eller fugt.

FORSIGTIG: (CAUTION) Installation af dette produkt skal foretages af en autoriseret installatør og skal være i overensstemmelse med alle anvendelige lokale retningslinier.

Modifikationer samt alternativt udstyr beskrevet i denne brugervejledning er kun henvendt til kvalificerede installatører og servicepersonale.

FORSIGTIG
Fare for elektrisk stød
- må ikke åbnes.

FORSIGTIG: **Med henblik på at reducere risikoen for elektrisk stød, må svæbet ikke fjernes.**

Indeholder ingen komponenter relevante for brugeren.

Anvend autoriseret servicepersonale ved alle servicetiltag.

VEILIGHEIDSINFORMATIE

De woorden **WAARSCHUWING** (WARNING) en **VOORZICHTIG** (CAUTION) welke in de handleiding en op het apparaat voorkomen, waarschuwen U voor belangrijke veiligheidsinformatie. Zij hebben de volgende betekenis:

WAARSCHUWING: (WARNING) De betreffende informatie waarschuwt U voor omstandigheden die kunnen leiden tot defecten of beschadigingen aan apparaten als de instructies niet volledig worden opgevolgd.

VOORZICHTIG: (CAUTION) De betreffende informatie instrueert U hoe U defecten aan apparatuur kunt voorkomen of hoe U omstandigheden kunt vermijden die kunnen resulteren in schade als de juiste stappen niet worden opgevolgd.

Produkt informatie en handleiding hanteren onderstaande internationaal erkende symbolen om veiligheidsinstructies aan te geven.

De bliksemschicht in een driehoek wordt gebruikt om de gebruiker te attenderen op ongeïsoleerde "gevaarlijke spanning" in het apparaat of bij de aansluitklemmen, die het risico van een electrische schok kunnen geven.

Het uitroepteken in een driehoek wordt gebruikt om de gebruiker te attenderen op belangrijke installatie, gebruiks- en onderhoudsinstructies in de beschrijving die bij het apparaat hoort.

WAARSCHUWING: (WARNING) OM HET RISICO VAN BRAND OF EEN ELECTRISCHE SCHOK TE VERMIJDEN DIENT U HET APPARAAT NIET AAN VOCHT BLOOT TE STELLEN.

VOORZICHTIG: (CAUTION) Installatie van dit apparaat dient te geschieden door gekwalificeerd personeel en dient te geschieden conform de plaatselijke voorschriften.

Modificaties en aanvullende informatie waar in de handleiding naar wordt verwezen, dient alleen voor gebruik door gekwalificeerd personeel.

VOORZICHTIG.
Risico van electrische schok.
Niet openen.

Waarschuwing: Om het risico van een electrische schok te verminderen het apparaat niet openen.

Er zijn geen, door gebruiker, vervangbare onderdelen in dit apparaat.

Service overlaten aan gekwalificeerd service personeel.

TURVALLISUUSTIEDOTE

Sanat **VAROITUS** (WARNING) ja **HUOMIO** (CAUTION), jotka esiintyvät manuaalissa ja itse laitteessa, ilmoittavat tärkeästä turvallisuusinformaatiosta. Näillä sanoilla on seuraava merkitys:

VAROITUS: (WARNING) Yhteydessä oleva informaatio varoittaa olosuhteista, jotka saattavat johtaa vakaviin vammoihin tai laitteen vaurioitumiseen, mikäli ohjeita ei täysin noudateta.

HUOMIO: (CAUTION) Yhteydessä oleva informaatio neuvoo, miten laitteen vaurioituminen voidaan ehkäistä tai miten voidaan välttää olosuhteet, jotka voivat johtaa lieviin vammoihin, mikäli ohjeita ei noudateta.

Tuotteessa tai käyttöohjeessa voidaan käyttää seuraavia alla määriteltyjä kansainvälisiä symboleja, jotka viittaavat turvallisuusinformaatioon.

Kolmion sisällä olevan nuolipäinen salama varoittaa käyttäjää laitteen sisällä tai liitännöissä olevasta eristämättömästä vaarallisesta jännitteestä, joka saattaa olla tarpeeksi suuri aiheuttaakseen sähköiskun vaaran.

Kolmion sisällä oleva huutomerkin tarkoituksena on ilmoittaa käyttäjälle tärkeistä asennusta, käyttöä tai huoltoa koskevista ohjeista laitteen mukana seuraavassa kirjallisuudessa.

VAROITUS: (WARNING) ÄLÄ ALTISTA LAITETTA SATEELLE TAI KOSTEUDELLE TULIPALON JA SÄHKÖISKUN VAARAN VUOKSI.

HUOMIO: (CAUTION) Laitteen asentaminen tulisi jättää ammattitaitoisen henkilön suoritettavaksi ja asennuksessa tulee noudattaa kaikkia paikallisia säännöksiä.

Tässä manuaalissa oleva informaatio, joka koskee muutostöitä ja lisälaitteita, on tarkoitettu vain ammattitaitoisten asennus- ja huoltohenkilöiden käyttöön.

HUOMIO
Sähköiskun vaara, älä avaa.

HUOMIO: ÄLÄ AVAA KANTTA SÄHKÖISKUN VAARAN VUOKSI

EI SISÄLLÄ KÄYTTÄJÄN HUOLLETTAVIA OSIA

JÄTÄ HUOLTO AMMATTITAITOISELLE HENKILÖKUNNALLE

SIKKERHETS INFORMASJON

Når ordene **ADVARSEL** (WARNING) og **VIKTIG** (CAUTION) blir brukt i manualen og på produktet, gjelder det informasjon som har med brukerens sikkerhet å gjøre. Ordene har følgende mening:

ADVARSEL: (WARNING) Tilhørende informasjon viser til forhold som kan resultere i alvorlige skader eller ødeleggelser hvis anvisningene ikke følges nøye.

VIKTIG: (CAUTION) Tilhørende informasjon forteller deg hvordan du skal unngå feil på utstyret, eller unngå situasjoner som kan resultere i mindre skader.

Produkt merkingen og bruksanvisningen bruker internasjonale symboler for å merke punkter som er viktige for brukerens sikkerhet.

Lynet i en triangel advarer brukeren om uisolert "farlig spenning" inne i apparatet, eller tilkoblings terminaler som kan gi støt.

Etter utropstegnet i en triangel følger informasjon som er viktig når det gjelder installasjon, bruk og vedlikehold (service) av apparatet.

ADVARSEL: (WARNING) FOR Å REDUSERE FAREN FOR BRANN ELLER STØT MÅ APPARATET IKKE UTSETTES FOR VANN ELLER FUKTIGHET.

VIKTIG: (CAUTION) Installasjon av apparatet skal foretas av autorisert installatør etter gjeldende forskrifter.

Modifikasjoner og tilleggs informasjon som følger er kun for kvalifiserte installatører eller service personell.

VIKTIG

FARE FOR STØT,
MÅ IKKE DEMONTERES.

VIKTIG: For å unngå faren for støt, må ingen deksler fjernes

Ingen interne deler skal justeres eller repareres av bruker.

Overlat service til autorisert personell.

SÄKERHETS INFORMATION

Orden **VARNING** (WARNING) och **OBSERVERA** (CAUTION) vilka används i denna manual och på apparaten, är menade att uppmärksamma viktig säkerhets information. Dessa ord har följande betydelse.

VARNING: (WARNING) Information som uppmärksammar på omständigheter som kan resultera i allvarlig personskada eller skada på egendom om instruktionerna ej följs.

OBSERVERA: (CAUTION) Information som uppmärksammar på instruktioner om hur skada på utrustning eller hur situationer där lättare personskador kan uppstå undvikes.

Följande internationellt använda ord och symboler används i handboken och på märkningar på produkten för att uppmärksamma användare på viktiga säkerhets instruktioner.

En blixt med pil, innesluten i en triangel, menad att uppmärksamma användare på närvaron av oisolerade "farliga spänningar" i apparaten eller på anslutnings kontakter vilka har tillräcklig styrka för att medföra risk för elektrisk söt.

Ett utropstecken, inneslutet i en triangel, menad att uppmärksamma användare på viktiga installations, handhavande eller underhålls-instruktioner i medföljande dokumentation.

VARNING: (WARNING) FÖR ATT MINSKA RISKEN FÖR BRAND ELLER ELEKTRISK STÖT, UTSÄTT EJ APPARATEN FÖR FUKT ELLER VÄTSKA.

OBSERVERA: (CAUTION) Installation av denna apparat skall utföras av kvalificerad installatör samt enligt alla gällande lokala bestämmelser.

Eventuella modifierings instruktioner och annan information av teknisk art i denna manual är endast avsedd att användas av kvalificierad installations och service personal.

OBSERVERA

RISK FÖR ELEKTRISK STÖT
FÅR EJ ÖPPNAS

OBSERVERA: FÖR ATT MINSKA RISKEN FÖR ELEKTRISK STÖT, AVLÄGSNA EJ LOCKET.

INGA AV ANVÄNDARE UTBYTBARA ELLER REPARERBARA KOMPONENTER INUTI DENNA APPARAT.

ALL SERVICE PÅ DENNA APPARAT SKALL UTFÖRAS AV KVALIFICIERAD PERSONAL

ΠΛΗΡΟΦΟΡΙΕΣ ΑΣΦΑΛΕΙΑΣ

Οι λέξεις **ΚΙΝΔΥΝΟΣ** (WARNING) και **ΠΡΟΣΟΧΗ** (CAUTION) που αναφέρονται μέσα στο εγχειρίδιο και στη συσκευή, επικεντρώνουν την προσοχή σε σημαντικές πληροφορίες ασφαλείας.
Οι λέξεις αυτές έχουν την παρακάτω σημασία.

ΚΙΝΔΥΝΟΣ : (WARNING) Η αναγραφόμενη πληροφορία επιστά την προσοχή σας σε καταστάσεις που θα μπορούσαν να έχουν σαν αποτέλεσμα σοβαρό τραυματισμό ή καταστροφή της ιδιοκτησίας αν οι οδηγίες δεν ακολουθηθούν κατάλληλα.

ΠΡΟΣΟΧΗ : (CAUTION) Η αναγραφόμενη πληροφορία σας καθοδηγεί πώς να προλάβετε καταστροφή του εξοπλισμού ή πώς να αποφύγετε καταστάσεις που θα μπορούσαν να έχουν ως αποτέλεσμα μικροτραυματισμούς αν δεν ακολουθηθούν τα σωστά βήματα.

Στις επιγραφές των προτόντων και στο εγχειρίδιο λειτουργίας, χρησιμοποιούνται τα σιεθνώς αναγνωρισμένα σύμβολα, των οποίων ο ορισμός δίνεται παρακάτω έτσι ώστε
να υπογραμμιστούν τα μηνύματα ασφαλείας.

Η φωτεινή αναλαμπή με σύμβολο το βέλος, μέσα στο τρίγωνο, έχει σκοπό να επιστήσει την προσοχή του χρήστη, στην ύπαρξη μη- μονωμένης « επικίνδυνης ισχύος ρεύματος » στο εσωτερικό της συσκευής ή στις άκρες σύνδεσης οι οποίες μπορεί να έχουν αρκετό μέγεθος ώστε να περιέχουν κίνδυνο ηλεκτροπληξίας.

Το επεξηγηματικό σημείο, μέσα στο τρίγωνο, έχει σκοπό να επιστήσει την προσοχή του χρήστη στις σημαντικές οδηγίες εγκατάστασης, λειτουργιας και συντήρησης (service) που περιέχονται στα φυλλάδια που συνοδεύουν την συσκευή.

ΚΙΝΔΥΝΟΣ : (WARNING) Για να αποφύγετε τον κίνδυνο φωτιάς ή ηλεκτροπληξίας, μην εκθέτετε αυτή τη αυσκευή σε βροχή ή σε υγρασία.

ΠΡΟΣΟΧΗ : (CAUTION) Η εγκατάσταση αυτής της συσκευής θα πρέπει να γίνει από εξειδικευμένο άτομο και θα πρέπει να προσαρμόζεται σε όλους τους εφαρμόσιμους τοπικούς κώδικες.

Οι τροποποιήσεις και οι προϋποθετικές πληροφορίες για τον εξοπλισμό, που αναφέρονται σε αυτό το εγχειρίδιο, προορίζονται για χρήση μόνο από εξειδικευμένα στην εγκατάσταση και στο service, άτομα.

ΠΡΟΣΟΧΗ

ΚΙΝΔΥΝΟΣ ΗΛΕΚΤΡΟΠΛΗΞΙΑΣ.
ΜΗΝ ΑΝΟΙΓΕΤΕ.

ΠΡΟΣΟΧΗ : ΓΙΑ ΝΑ ΜΕΙΩΣΕΤΕ ΤΟΝ ΚΙΝΔΥΝΟ ΗΛΕΚΤΡΟΠΛΗΞΙΑΣ, ΜΗΝ ΜΕΤΑΚΙΝΗΣΕΤΕ ΤΟ ΚΑΛΥΜΜΑ.

ΔΕΝ ΠΑΡΕΧΟΝΤΑΙ ΑΝΤΑΛΛΑΚΤΙΚΑ SERVICE ΣΤΟΝ ΧΡΗΣΤΗ

ΓΙΑ SERVICE ΑΝΑΦΕΡΘΕΙΤΕ ΣΤΟ ΕΞΟΥΣΙΟΔΟΤΗΜΕΝΟ ΠΡΟΣΩΠΙΚΟ SERVICE

INFORMAÇÃO SOBRE SEGURANÇA

As palavras ADVERTÊNCIA (WARNING) e PRECAUÇÃO (CAUTION) neste manual, e no dispositivo, alertam para importantes informações sobre segurança. Estas palavras significam o seguinte:

ADVERTÊNCIA : (WARNING) Informação relacionada que alerta sobre condições que poderão resultar em lesões sérias ou prejuízo, se as instruções não forem seguidas adequadamente.

PRECAUÇÃO : (CAUTION) Informação relacionada que instrúi como prevenir danos no equipamento ou como evitar condições que poderão resultar em lesões leves, se os passos não forem seguidos adequadamente.

As etiquetas do produto e do manual de operações podem usar os símbolos internacionalmente reconhecidos definidos abaixo para advertir mensagens de segurança.

símbolo do relâmpago com uma seta, dentro de um triângulo, tem o fim de alertar o usuário a presença de "voltagem perigosa" sem isolação dentro da caixa isolamento do aparelho ou nos terminais de ligação que podem ter a magnitude suficiente que constitui um risco de choque eléctrico.

ponto de exclamação, dentro de um triângulo, tem o fim de alertar o usuário sobre instruções importantes de instalação, operação e manutenção (serviços) na literatura que acompanha o aparelho.

ADVERTÊNCIA : (WARNING) PARA REDUZIR O RISCO DE INCÊNDIO OU CHOQUE ELÉCTRICO, NÃO EXPONHA ESTE APARELHO A CHUVA OU HUMIDADE.

PRECAUÇÃO : (CAUTION) A instalação deste aparelho deve ser feita por um profissional qualificado e deve obedecer a todos os códigos locais aplicáveis.

Modificação e informação sobre equipamento adicional citados neste manual são para o uso exclusivo do pessoal qualificado de instalação e manutenção.

PRECAUÇÃO

RISCO DE CHOQUE ELÉCTRICO.
NÃO ABRA.

PRECAUÇÃO: PARA REDUZIR O RISCO DE CHOQUE ELÉCTRICO, NÃO REMOVA A TAMPA.

PARTES INTERNAS NÃO MANTIDAS PELO USUÁRIO.

ENCAMINHE A MANUTENÇÃO PARA PESSOAL DE SERVIÇOS QUALIFICADO.