Advantage "SYSTEM ONE"
Modular Mixing System

Operating Manual

BIAMP®

SYSTEMS

10074 SW Arctic Drive Beaverton, OR 97005 503-641-7287

TABLE OF CONTENTS

System One description	pg. 2
Advantage ONE & EX modules	pg. 4
Advantage AGII module	pg. 8
Advantage RCII module	pg. 12
Advantage AM module	pg. 14
Advantage EQ module	pg. 18
Cables	pg. 20
Power Considerations	pg. 21
Modifications & Accessories	pg 22
AGII Logic Outputs	pg. 24
Applications	pg. 26
Warranty	

INTRODUCTION

Advantage **SYSTEM ONE** is an extremely flexible, high-performance mixing system consisting of several functional modules. SYSTEM ONE modules can be combined in a wide variety of system configurations, tailored for specific applications . . . easily and inexpensively. SYSTEM ONE modules may also be used separately, to provide their functions to existing sound systems.

SYSTEM ONE modules:

Advantage ONE is an 8-channel mic/line *mixer* with HPF, notch filters, output EQ, and limiter.

Advantage EX is an 8-channel mic/line *expander*, which provides limitless inputs to a system.

Advantage AGII is an 8-channel *auto gate*, which provides automatic mixer functions to a system.

Advantage RCII is a 4-channel VCA *remote control*, which provides level and mute functions to a system.

Advantage AM is an 8-channel/3-send *auxiliary mixer*, which provides limitless send/zone outputs to a system.

Advantage EQ is an 8-channel/3-band *equalizer*, which provides EQ for inputs or outputs of a system.

From a simple 8-channel mic/line mixer . . . to an automatic mixer with unlimited inputs, channel priority, logic outputs, remote control, 3-band EQ, and multiple zone outputs . . . Advantage SYSTEM ONE gives you a creative and powerful tool. SYSTEM ONE modules may be used together, alone, or with other audio products, in a wide range of applications including: churches, courtrooms, boardrooms, tele-conferencing, legislatures, city council chambers, hotels, and restaurants.

?

After reading this manual, if you have any questions or need technical assistance, please call Biamp Systems toll-free **1-800-826-1457**.

SYSTEM ONE DESCRIPTION

System One is an extremely flexible, high-performance mic/line mixing system. This system is comprised of several unique rack-mountable modules, which may be configured for a variety of applications. These modules are designed for easy connection to each other, as well as other types of audio equipment. Applications for **System One** modules range from a simple 8-channel mic/line mixer, to an automatic mixer with unlimited inputs, channel priority, logic outputs, remote control, 3-band EQ, and multiple zone outputs. Individual modules may be used independently, to expand the capabilities of other sound systems.

System One includes the following modules:

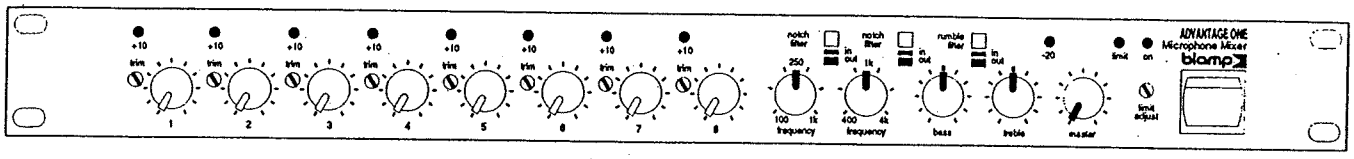

Advantage ONE is a single rack-space, high-performance, 8-channel mic/line mixer. Each channel includes Mic Trim, Pad Switch, Level Control, XLR Balanced Input, 1/4" Phone Patch Insert Jack, and Peak Indicator. The output section includes two Variable Notch Filters with Bypass Switches, Bass & Treble EQ, Switchable Rumble Filter, Signal Present Indicator, Master Level Control, Output Limiter with Threshold Adjust & Indicator, 1/4" Phone Main Patch Insert Jack, XLR Balanced Main Stacking Input Jack, XLR Balanced Main Output Jack, Power Indicator, and Modular DC Output Jack.

User options for the Advantage ONE include Input Transformers, Channel 8 "Ducking", Main EQ Bypass, Internal +12 Volt Phantom Power, and External +48 Volt Phantom Power.

The Advantage ONE utilizes ultra-low noise, discrete transistor input preamplifiers and a transformer isolated balanced output to achieve excellent audio performance and compatibility with any system. This module may be used alone, or as a sub-mixer with an existing system, or with other System One modules to create expanded and automatic systems.

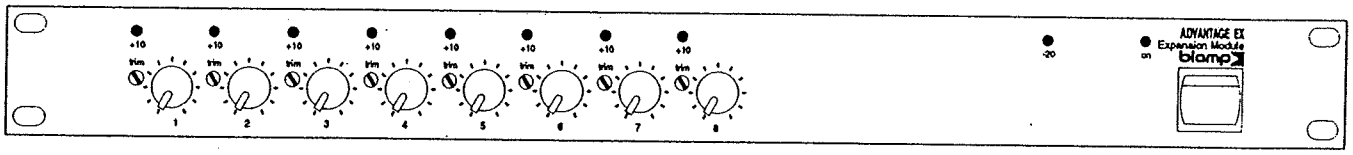

Advantage EX is a single rack-space, high-performance, 8-channel mic/line mixer. It is similar to the Advantage ONE module, but does not include Variable Notch Filters, Bass & Treble EQ, Rumble Filter, Master Level Control, Output Limiter, or Channel 8 "Ducking" capability. The output of the Advantage EX is electronically balanced.

The Advantage EX module is intended primarily as an input channel expander (EX) for the Advantage ONE, but it may be used as an independent mixer, or to increase the input capability of any existing mixer. The Advantage EX can provide limitless inputs to a system.

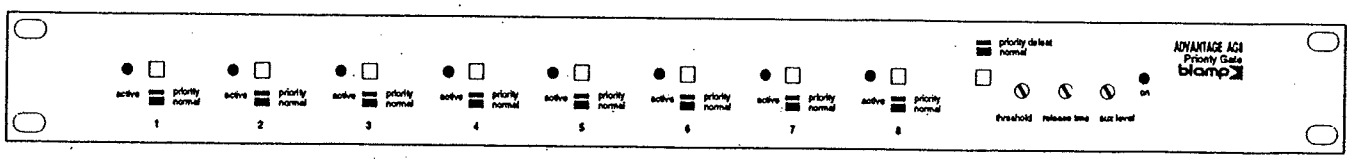

Advantage AGII is a single rack-space module consisting of 8 channels of automatic gating (AG). Each channel includes 1/4" Phone Patch Insert Jack, 1/4" Phone In/Out Jack, Priority Switch, and Channel Active Indicator. The Master section includes Priority Defeat Switch, Minimum Threshold Adjustment with Adaptive Threshold Sensing (ATS), NOM Attenuation, Release Time Adjust, Aux Output with Level Adjust, Modular AG Expansion Jack, Logic Outputs, Power Indicator, and Modular DC In & DC Out Jacks.

The Advantage AGII is intended primarily to be used with Advantage ONE & EX modules to create complete automatic mixing systems. However, this module may be used, with optional power supply, to provide automatic gating functions to any sound system.

Advantage RCII is a single rack-space, 4-channel VCA remote control (RC). Each channel includes 1/4" Phone Patch Insert Jack, 1/4" Phone In/Out Jack, and Voltage Controlled Amplifier (VCA). The Master section includes VCA Control Voltage Inputs on Barrier Strip, Power Indicator, and Modular DC In & DC Out Jacks.

The Advantage RCII is intended primarily to provide remote control of input and/or output levels within System One applications. However, this module may be used, with optional power supply, to provide remote control functions to any sound system. This module allows remote level controls and/or muting switches to be wired up to 2000 feet from the sound system. The Advantage RCII provides an internal control voltage, but may also be controlled by external control voltages from the Advantage DRC 4+4 Digital Remote Control, or even a standard +10 Volt lighting controller.

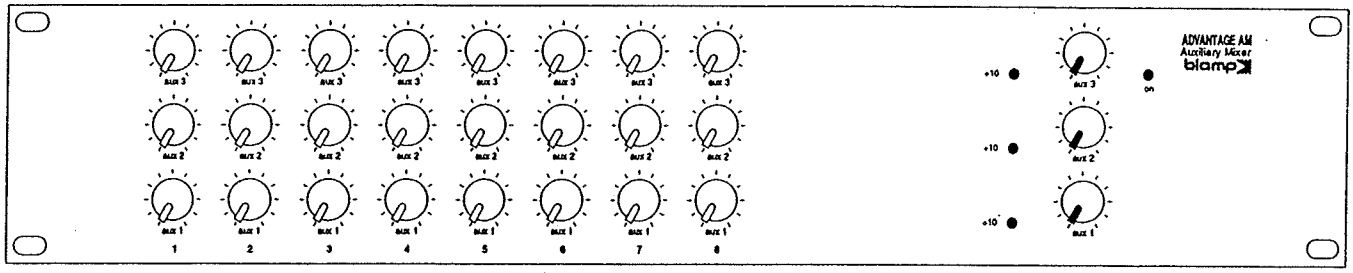

Advantage AM is a two rack-space , 8-channel/3-send auxiliary mixer (AM). Each channel includes three Auxiliary Send Level Controls, 1/4" Phone Patch Insert Jack, and 1/4" Phone In/Out Jack. The Master section includes three Master Auxiliary Send Level Controls, three Output Peak Indicators, Power Indicator, three 1/4" Phone Patch Insert Jacks, three 1/4" Phone Expansion In Jacks, three 1/4" Phone Expansion Out Jacks, three XLR Balanced Output Jacks, and Modular DC In & DC Out Jacks.

The Advantage AM is intended primarily to provide auxiliary sends within System One applications. However, this module may be used, with optional power supply, to provide auxiliary sends to any sound system. The Advantage AM is fully expandable, and multiple modules may be connected together to increase input and/or output capability. Any mixer can be supplied with limitless auxiliary sends, regardless of the number of input channels involved. Applications range from simply providing three additional sends for an 8-channel mixer, to creating a complete matrix mixer for monitor/zone mixing.

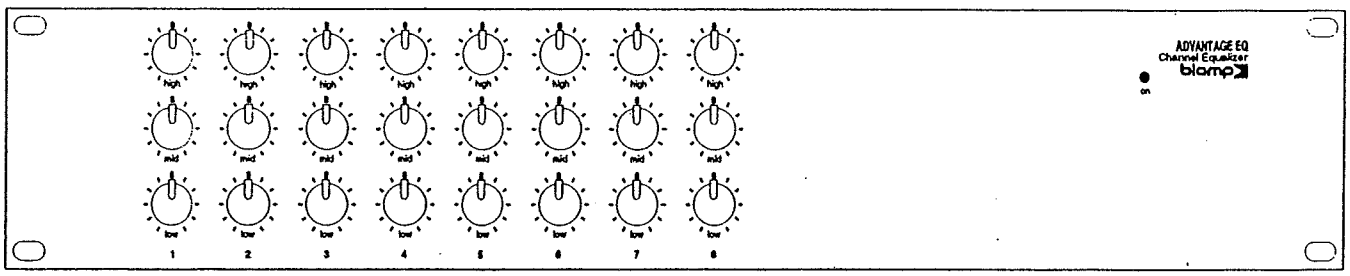

Advantage EQ is a two rack-space, 8-channel/3-band equalizer (EQ). Each channel includes High-Frequency Level Control, Mid-Frequency Level Control, Low-Frequency Level Control, 1/4" Phone Patch Insert Jack, and 1/4" Phone In/Out Jack. The Master section includes Power Indicator and Modular DC In & DC Out Jacks.

The Advantage EQ is intended primarily to provide input channel equalization for System One mixers. However, this module may be used, with optional power supply, to provide input and/or output equalization to any sound system.

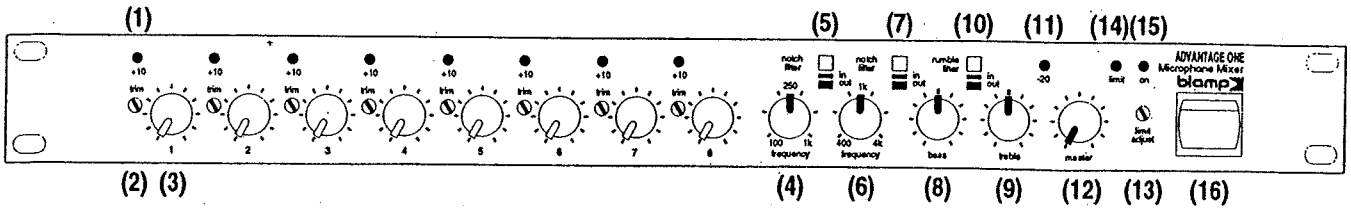

(1) Peak Indicator (+10): This red LED indicates channel signal levels of +10dB (8dB below clipping).

(2) Trim: This control adjusts the channel gain to compensate for different input signal levels. For best performance, adjust this control so the Peak Indicator (+10) is activated by occasional peaks in channel signal level. When using an Advantage ONE/EX with an Advantage AGII (as an automatic mixer), proper adjustment of the Advantage ONE/EX Trim controls is essential for accurate Threshold adjustment on the Advantage AGII (see Advantage AGII: Threshold on page 8). After the Advantage AGII Threshold control is set, the Advantage ONE/EX Trim controls may be used to "fine-tune" individual channel sensitivity. This control is factory set for maximum gain of 58dB.

(3) Level: This control adjusts the level of channel signal being sent to the Main Output section. (See Modifications: Channel 8 "Ducking" on page 22.)

(4) Notch Filter 1 Frequency: Two variable notch filters are provided in the Main Output section (Advantage ONE only) to help control feedback and room resonance problems. These filters have a depth of 9dB and a width of 1/6 octave. This control adjusts the center frequency of Notch Filter 1 from 100Hz to 1kHz.

(5) Notch Filter 1 In/Out Switch: This switch, when depressed, activates Notch Filter 1 (Advantage ONE only).

(6) Notch Filter 2 Frequency: This control adjusts the center frequency of Notch Filter 2 from 400Hz to 4kHz (Advantage ONE only).

(7) Notch Filter 2 In/Out Switch: This switch, when depressed, activates Notch Filter 2 (Advantage ONE only).

(8) Bass: This control provides low-frequency equalization of +/-8dB @ 100Hz (Advantage ONE only). (See Modifications: EQ Bypass on page 22.)

(9) Treble: This control provides high-frequency equalization of +/-8dB @ 10kHz (Advantage ONE only). (See Modifications: EQ Bypass on page 22.)

(10) Rumble Filter: This switch, when depressed, activates a high-pass filter with a slope of 6dB per octave @ 170Hz (Advantage ONE only).

(11) Signal Present Indicator (-20): This red LED indicates signal levels greater than -20dB are present at the Main Output.

(12) Master Level: This control adjusts the level of signal being sent to the Main Output (Advantage ONE only). When using an Advantage ONE with an Advantage AGII (as an automatic mixer), the Main Output level is also affected by "NOM Attenuation" (see Advantage AGII: DC In on page 9).

(13) Limit Adjust: A limiter is provided in the Main Output section (Advantage ONE only) to help eliminate unwanted peaks in program signal level. This control adjusts the threshold level at which the limiter is activated. For most applications, set this control so the Limit Indicator is activated by occasional peaks in program signal level. Counter-clockwise adjustment lowers the threshold, increasing the amount of limiting. Clockwise adjustment raises the threshold, ultimately removing the limiter from operation. This control is factory set fully clockwise (limiter off).

(14) Limit Indicator: This red LED indicates when the limiter is activated by program signal levels that exceed the threshold (Advantage ONE only).

(15) On Indicator: This red LED indicates when the Power Switch is turned on and power is applied to the module.

(16) Power Switch.

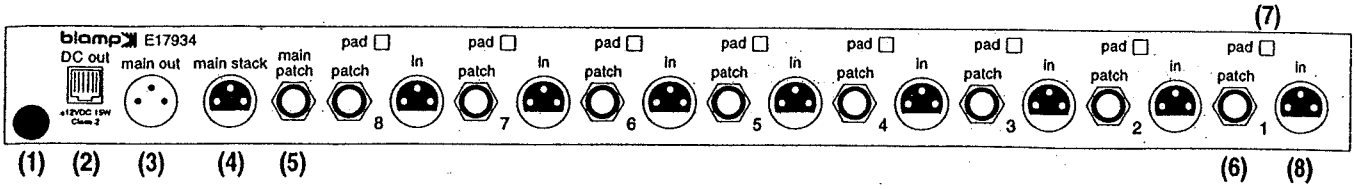

(1) AC Power Cord: The external power transformer provides 27 Volts AC to the mixer, and is detachable via a 5-pin DIN connector. The mixer has two internal 1 amp normal blow (1A NB) fuses. If these fuses should require replacement, use same value and type fuses only. An optional +48 Volt Phantom Power Supply may be inserted 'in-line' with the AC Power Cord (See Accessories: +48V Phantom Power Supply on page 22).

(2) DC Out: This Modular jack supplies +/-12 Volts DC power for other System One modules. An Advantage ONE/EX is capable of supplying power for up to two additional modules (see Power Considerations on page 21). When using an Advantage ONE with an Advantage AGII (as an automatic mixer), this jack also carries "NOM Attenuation" information (see Advantage AGII: DC In on page 9).

(3) Main Out: This 3-pin XLR jack provides a balanced Main Output from the mixer. The Main Out on the Advantage ONE is transformer isolated. It is capable of driving long signal lines and is primarily for connection to amplification systems. The Main Out of the Advantage EX is electronically balanced and is primarily for connection to Advantage ONE or EX modules. Either module may be connected to other mixers to increases their input capability. Both Advantage ONE and EX Main Out jacks are wired to the DIN standard, with Pin 2 being High (+), Pin 3 being Low (-), and Pin 1 being Ground. If unbalanced output from an Advantage ONE is desired, connect to Main Out with Pin 2 being High (+), and both Pin 3 & Pin 1 being Ground. If unbalanced output from an Advantage EX is desired, connect to Main Out with Pin 2 being High (+), Pin 3 floating, and Pin 1 being Ground.

(4) Main Stack: This 3-pin XLR jack provides a balanced "stacking" input. Signal entering here is combined with signals from the input channels, before being sent to the Main Output section. When using an Advantage ONE with an Advantage EX (as an input channel expander), connect Main Stack of the Advantage One to Main Out of the Advantage EX using a standard balanced XLR cable. Additional Advantage EX modules may be connected "in series" to accept unlimited inputs (see Applications: 32 Input Mixer on page 30). The Main Stack jack may be used as an auxiliary input from other equipment. This jack is wired to the DIN standard, with Pin 2 being High (+), Pin 3 being Low (-), and Pin 1 being Ground. If unbalanced input is desired, connect to the Main Stack jack with Pin 2 being High (+), and both Pin 3 & Pin 1 being Ground.

(5) Main Patch: This 3-conductor 1/4" Phone jack is for connection of outboard processing equipment to the Main Output section of an Advantage ONE/EX. The Main Patch jack is Post-Main EQ/Pre-Main Level and is wired with Tip being Send, Ring being Return, and Sleeve being Ground. When using an Advantage ONE/EX with an Advantage RCII (as a remote Main Output level control), connect Main Patch of the Advantage ONE/EX to an In/Out jack of the Advantage RCII using a standard balanced 1/4" Phone cable (see Advantage RCII: In/Out on page 12). This same connection may be made to an Advantage AGII if "gating" of the Main Output is desired (see Advantage AGII: In/Out on page 9). Other types of processing equipment may be connected to the Main Patch jack using a special "Patch" cable (see Cables: Patch on page 20). If a "Pre-Main Level" output is desired, connect to Main Patch with Tip & Ring being Send, and Sleeve being Ground.

(6) Patch: This 3-conductor 1/4" Phone jack is for connection of outboard processing equipment to the channel. It is Pre-Channel Level and is wired with Tip being Send, Ring being Return, and Sleeve being Ground. When using an Advantage ONE/EX with an Advantage AGII (as an automatic mixer), connect Patch jacks of the Advantage ONE/EX to In/Out jacks of the Advantage AGII using standard balanced 1/4" Phone cables (see Advantage AGII: In/Out on page 9). This same connection may be made to an Advantage RCII if remote channel level control is desired (see Advantage RCII: In/Out on page 12). Other types of processing equipment may be connected to the Patch jack using a special "Patch" cable (see Cables: Patch on page 20). If a "Pre-Channel Level" output is desired, connect to Patch with Tip & Ring being Send, and Sleeve being Ground.

(7) Pad: This switch, when depressed, reduces the channel input signal level by 30dB. Depress this switch when channel input signal levels exceed normal operating range of the front panel Trim control (or when line level input is desired).

(8) In: This 3-pin XLR jack provides a balanced mic/line input to the channel. The input is electronically balanced, using discrete transistor differential circuitry. Input transformers may be installed if desired (see Accessories: Input Transformers on page 22). There is an internal +12 Volt Phantom Power supply available for operation of condenser microphones (see Modifications: Phantom Power on page 22). If +48 Volt Phantom Power is required, an external power supply is available (see Accessories: +48V Phantom Power on page 22). The In jack is wired to the DIN standard, with Pin 2 being High (+), Pin 3 being Low (-), and Pin 1 being Ground. If unbalanced input is desired, connect to the In jack with Pin 2 being High (+), and both Pin 3 & Pin 1 being Ground.

Frequency Response (20Hz-20kHz @ +4dBu):	+0/-3dB
Total Harmonic Distortion (20Hz-20kHz @ +4dBu):	<0.08%
Equivalent Input Noise (20Hz-20kHz, 150 ohm term.):	-126dBu
Output Noise (20Hz-20kHz):	
master level control down	<-85dBu
master level & one channel at nominal	<-75dBu
Maximum Gain:	
mic input to main output	78dB
channel patch to main output	20dB
main patch to main output	10dB
main stack to main output	15dB
Crosstalk (channel-to-channel @ 1kHz):	-60dB
Output Tone Controls (Advantage ONE only):	
Treble	+/-8dB @ 10kHz
Bass	+/-8dB @ 100Hz
Output Notch Filters (Advantage ONE only):	
Variable Notch Filter 1 (Q=8)	-9dB @ 100Hz-1kHz
Variable Notch Filter 2 (Q=8)	-9dB @ 400Hz-4kHz
Output Rumble Filter (Advantage ONE only):	
frequency	-3dB @ 170Hz
slope	6dB/octave
Output Limiter (Advantage ONE only):	
attack time	1 mSec
release time	program dependent
threshold range	-35dB to limiter off
Output Impedance:	
main output (balanced)	<150 ohms
channel patch (unbalanced)	50 ohms
main patch (unbalanced)	50 ohms
Maximum Output:	
channel patch & main patch	+18dBu
main output	+18dBu
Input Impedance:	
mic/line input (balanced)	4.55k ohms
channel patch (unbalanced)	>7.5k ohms
main patch (unbalanced)	>10k ohms
main stack (balanced)	20k ohms
Maximum Input:	
mic/line input, channel patch & main patch	+30dBu
main stack	+15dBu
Connectors:	
mic/line input	XLR (female)
channel patch	TRS 1/4" Phone
main patch	TRS 1/4" Phone
main stack	XLR (female)
main output	XLR (male)
Indicators:	
channel peak (+10)	red LED
signal present (-20)	red LED
power	red LED
limiter (Advantage ONE only)	red LED
Power Requirements:	120/240VAC 50/60Hz
Power Consumption:	15 watts max.
Dimensions:	
height (1 rack space)	1.75 inches (44mm)
width	19 inches (483mm)
depth	7 inches (178mm)
Weight:	6 lbs. (2.72kg)

Advantage ONE Block Diagram

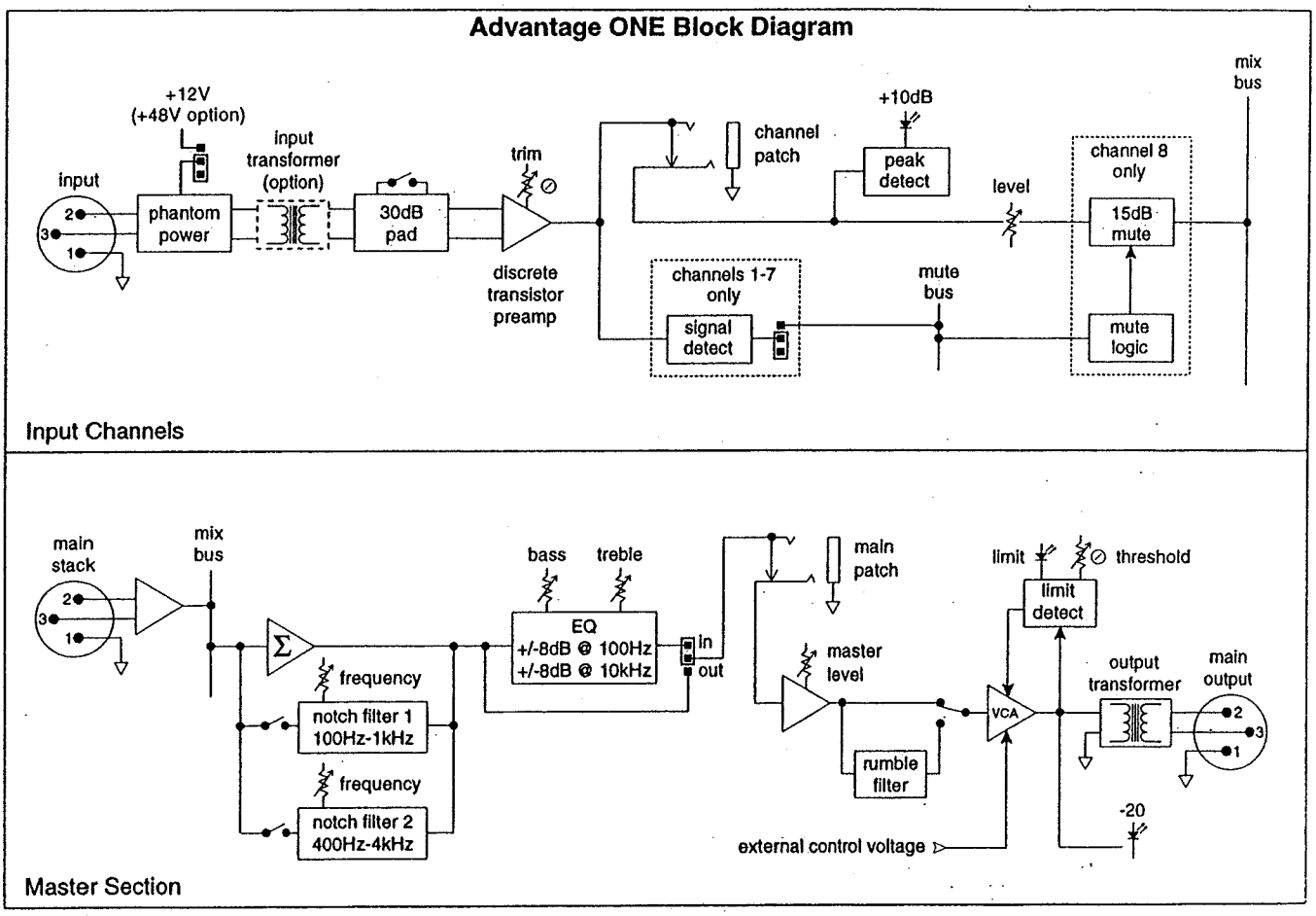

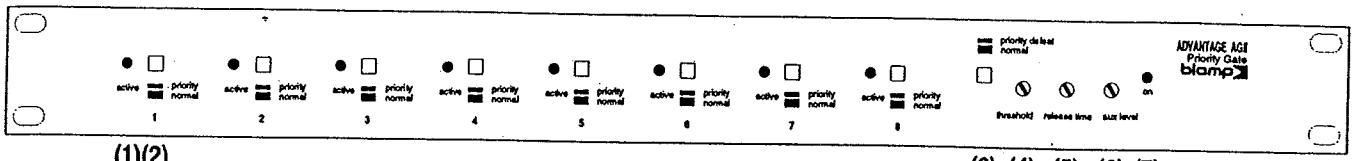

(1)(2) (3) (4) (5) (6) (7)

(1) Active Indicator: This red LED indicates the channel "gate" is open, allowing signal to pass. When channel signal levels are insufficient to open the "gate", the Active Indicator remains off and signal levels are attenuated by 30dB. (See Threshold on this page.)

(2) Priority: This switch, when depressed, permits the channel to take "priority" over other channels. Any "priority" channel, when active, causes all "non-priority" channels to turn off ("gate" closed). More than one channel may be designated as a "priority" channel.

(3) Priority Defeat: This switch, when depressed, defeats the "priority" function of all channels. Depress this switch when operation/calibration of the system is necessary without disturbing channel "priority" assignments.

(4) Threshold: This control adjusts the minimum signal level (threshold) at which the channel "gates" will open. The Threshold circuit also has 6dB of hysteresis, which allows a channel to stay open until the signal level drops below the threshold by 6dB. This hysteresis reduces the tendency for a gate to "flutter" when it detects a signal that is right at the threshold level. Because of the hysteresis, different threshold settings will be arrived at depending on how you adjust this control. If you start with the Threshold control fully clockwise and then turn it counter-clockwise, continue to adjust the threshold until all channels are easily activated by normal signal levels. This approach sets the threshold as high above the ambient noise as possible. If you start with the Threshold control fully counter-clockwise and then turn it clockwise, continue to adjust the threshold until no channels are gated on by ambient noise. This approach sets the threshold for the greatest channel sensitivity. During normal operation, the threshold is further controlled by Adaptive Threshold Sensing (ATS). ATS monitors the signals from all "active" channels and automatically adjusts the threshold level to prevent false activation of other channels. When using an Advantage ONE/EX with an Advantage AGII (as an automatic mixer), proper adjustment of the Advantage ONE/EX Trim controls is essential for accurate Threshold adjustment on the Advantage AGII (see Advantage ONE & EX: Trim on page 4). After the Advantage AGII Threshold control is set, the Advantage ONE/EX Trim controls may be used to "fine-tune" individual channel sensitivity. The Threshold adjustment range is -10dB to -45dB. This control is factory set fully clockwise (-10dB).

(5) Release Time: This control adjusts the length of time that any channel remains active ("gate" open) after the input signal level has dropped below the threshold. Release Time is adjustable from 200 milliseconds to 4 seconds. Since the "gates" open quite fast (Attack Time 4 milliseconds), precise adjustment of Release Time may not be critical. When using "priority" functions, long Release Times may interfere with "non-priority" channels. This control is factory set fully counter-clockwise (200 milliseconds).

(6) Aux Level: This control adjusts the level of the Aux Output (see Advantage AGII: Aux Output on page 9). Aux Level is factory set for nominal levels of -10dBu.

(7) On Indicator: This red LED indicates power is applied to the module (see Advantage AGII: DC In on page 9).

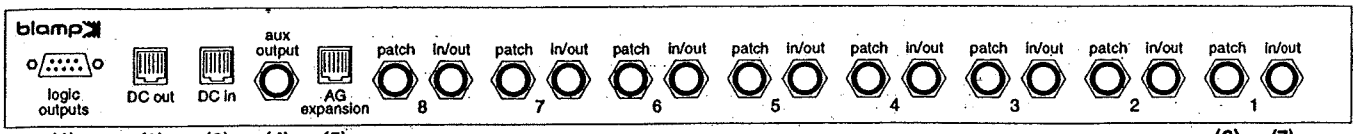

(1) Logic Outputs: This 9-pin Subminiature D connector provides logic outputs from the eight channel "gates", plus a common ground. When a gate is open ("active"), the associated logic output goes on. Logic Outputs may be used to control external switching circuits, such as relays. These outputs are most often used to turn off certain speakers, when certain microphones are active. (See AGII Logic Outputs on page 24.)

(2) DC Out: This Modular jack supplies +/-12 Volts DC power for other System One modules. When using an Advantage ONE/EX, an Advantage AGII, and an Advantage RCII (as an automatic mixer with remote level control), connect DC Out of the Advantage AGII to DC In of the Advantage RCII (see Advantage RCII: DC In on page 12). An Advantage ONE/EX is capable of supplying power for up to two additional modules (see Power Considerations on page 21). (See also Applications: 8 Input Automatic Mixer with 4 Channel Remote Control on page 28.)

(3) DC In: This Modular jack accepts +/-12 Volts DC power from other System One modules. When using an Advantage ONE/EX with an Advantage AGII (as an automatic mixer), connect DC Out of the Advantage ONE/EX to DC In of the Advantage AGII (see Cables: Modular on page 20). The Advantage AGII receives power only when the Advantage ONE/EX Power Switch is turned on. This connection also carries information regarding the number of "active" channels. As the number of "active" channels increases, the Main Output level of an Advantage ONE will automatically be reduced to avoid feedback ("NOM Attenuation"). "NOM Attenuation" only occurs between an Advantage AGII and an Advantage ONE (see AG Expansion on this page). When using an Advantage AGII with other mixers, a separate power supply is necessary (see Accessories: External Power Supply on page 22).

(4) Aux Output: This 3-conductor 1/4" Phone jack provides an "ungated" output from the channels for recording purposes. The Aux Output level is adjusted by the Aux Level control on the front panel. Aux Level is factory set for recorders which operate at nominal levels of -10dBu. This jack is wired with Tip and Ring being High (+), and Sleeve being Ground. Connection may be standard unbalanced, with Tip being High (+) and Sleeve being Ground. However, Tip and Ring may be sent to separate inputs, such as Left and Right inputs on a stereo recorder (see Cables: Patch on page 20).

(5) AG Expansion: This Modular jack is for connection to additional Advantage AGII modules. When using an Advantage ONE with Advantage EX modules (as input channel expanders), more than one Advantage AGII module may be added to the system (for automatic mixing). (See Applications: 16 Input Automatic Mixer on page 29.) It is necessary for multiple Advantage AGII modules to share information regarding "active" and "priority" channels, as well as Adaptive Threshold Sensing. This transfer of information is accomplished by connecting AG Expansion jacks together. When only two Advantage AGII modules are used, this connection requires a single Modular cable (see Cables: Modular on page 20). When more than two Advantage AGII modules are used, a multi-jack adapter is required (available from Biamp #909-0027-00). The information shared by all Advantage AGII modules is processed only by the Advantage AGII which is connected to the Advantage ONE (master) module. To prevent system errors, a jumper must be removed from all Advantage AGII modules, except the one connected to the Advantage ONE module (see Modifications: AG Expansion on page 22).

(6) Patch: This 3-conductor 1/4" Phone jack is for connection of outboard processing equipment to the "gate" channel. It is Post-"gate", and is wired with Tip being Send, Ring being Return, and Sleeve being Ground. When using an Advantage ONE/EX, an Advantage AGII, and an Advantage RCII (as an automatic mixer with remote level control), connect Patch jacks of the Advantage AGII to In/Out jacks of the Advantage RCII using standard balanced 1/4" Phone cables (see Advantage RCII: In/Out on page 12). Other types of processing equipment may be connected to the Patch jack using a special "Patch" cable (see Cables: Patch on page 20). If a Post-"gate" channel output is desired, connect to Patch with Tip & Ring being Send, and Sleeve being Ground.

(7) In/Out: This 3-conductor 1/4" Phone jack is for connection of the "gate" channel to Advantage ONE/EX modules or other mixers. In/Out jacks are wired with Tip being Input, Ring being Output, and Sleeve being Ground. When using an Advantage ONE/EX with an Advantage AGII (as an automatic mixer), connect Patch jacks of the Advantage ONE/EX to In/Out jacks of the Advantage AGII using standard balanced 1/4" Phone cables (see Applications: 8 Input Automatic Mixer with Channel 8 "Ducking" on page 26). This same connection may be made to any mixer having "Patch" jacks identical to the System One modules (see Advantage ONE & EX: Patch on page 5). Connection to In/Out jacks may also be made using a special "Patch" cable (see Cables: Patch on page 20). If only standard unbalanced cables are available, connect to the Advantage AGII using In/Out as the input and Patch as the output.

Frequency Response (20Hz-20kHz @ +4dBu):	+0, -1dB
Total Harmonic Distortion (20Hz-20kHz @ +4dBu):	<0.07%
Hum & Noise (20Hz-20kHz):	<-90dBu
NOM Attenuation (for each doubling of active channels):	3dB
Gate Functions:	
attack time	4mS
release time (adjustable)	200mS to 4 Seconds
threshold (adjustable)	-60dBu to -22dBu
Channel Off Attenuation:	30dB
Background Noise Reduction:	
8 inputs	9dB
16 inputs	12dB
Feedback Stability Improvement:	
8 inputs	9dB
16 inputs	12dB
Input Impedance:	
channel In/Out (unbalanced)	23.5k ohms
channel Patch (unbalanced)	interface dependent
Maximum Input Level:	+18dBu
Output Impedance:	
channel In/Out (unbalanced)	50 ohms
channel Patch (unbalanced)	50 ohms
non-gated Aux Out (unbalanced)	2k ohms
Maximum Output Level:	+18dBu
Priority Functions:	
channels	channel priority assign
master	priority function defeat
Logic Outputs (open collector/negative true):	
maximum sink current (DC)	50mA
maximum collector voltage (DC)	24V
Connectors:	
channel In/Out & Patch	TRS 1/4" phone
Aux Out	TRS 1/4" phone
AG Expansion	6-conductor modular
DC In & DC Out	6-conductor modular
Logic Outputs	9-pin male subminiature D
Indicators:	
active (gate open)	red LED
power	red LED
Power Requirements (from ONE/EX or opt. supply):	+/-12VDC @ 100mA
Power Consumption:	12 watts max.
Dimensions:	
height (1 rack space)	1.75 inches (44mm)
width	19 inches (483mm)
depth	5 inches (127mm)
Weight:	5 lbs. (2.27kg)

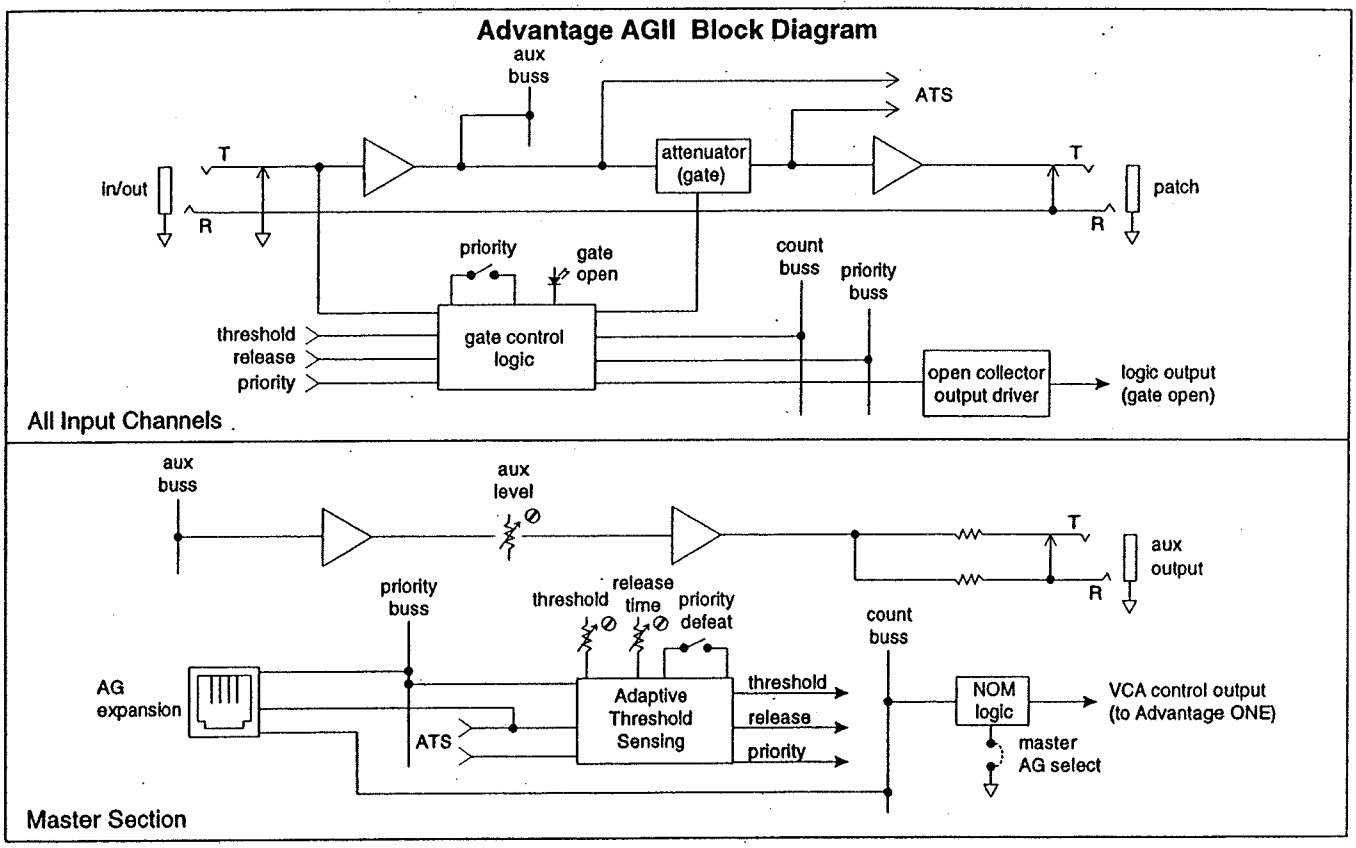
Advantage AGII Block Diagram
aux buss
ATS
T
in/out
R
attenuator (gate)
T
R
patch
priority
gate open
count buss
priority buss
threshold
release
priority
gate control logic
open collector output driver
logic output (gate open)
All Input Channels
aux buss
aux level
T
R
aux output
priority buss
threshold
release time
priority defeat
count buss
AG expansion
ATS
Adaptive Threshold Sensing
threshold
release
priority
NOM logic
VCA control output (to Advantage ONE)
master AG select
Master Section

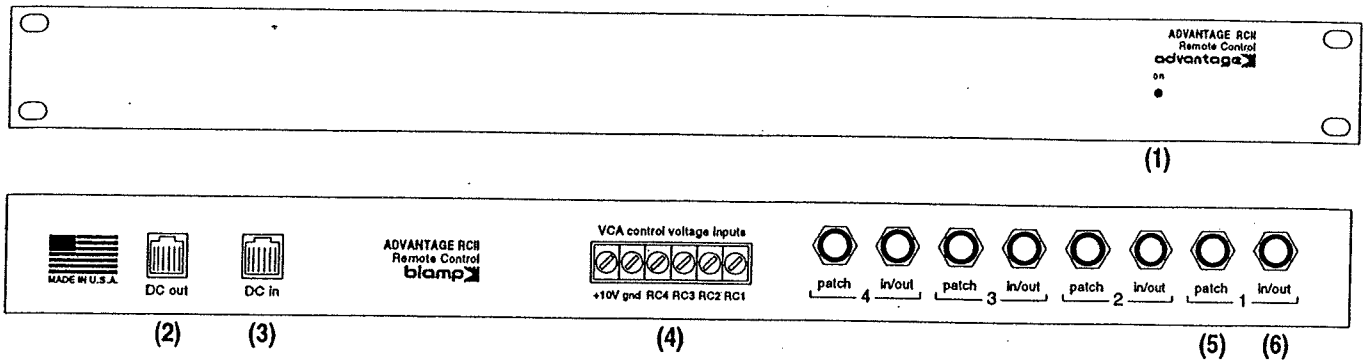

(1) On Indicator: This red LED indicates power is applied to the module (see Advantage RCII: DC In on this page).

(2) DC Out: This Modular jack supplies +/-12 Volts DC power for other System One modules. When using an Advantage ONE/EX with two Advantage RCII modules (as remote level controls), connect DC Out of the first Advantage RCII to DC In of the second Advantage RCII (see Advantage RCII: DC In on this page). An Advantage ONE/EX is capable of supplying power for up to two additional modules (see Power Considerations on page 21). (See also Applications: 8 Input Mixer with 8 Channel Remote Control on page 27.)

(3) DC In: This Modular jack accepts +/-12 Volts DC power from other System One modules. When using an Advantage ONE/EX with an Advantage RCII (as a remote level control), connect DC Out of the Advantage ONE/EX to DC In of the Advantage RCII (see Cables: Modular on page 20). The Advantage RCII receives power only when the Advantage ONE/EX Power Switch is turned on. When using an Advantage RCII with other mixers, a separate power supply is necessary (see Accessories: External Power Supply on page 22).

(4) VCA Control Voltage Inputs: This 6-terminal barrier strip is for connection of remote control elements to the channels. Each channel provides a Voltage Controlled Amplifier (VCA) with an attenuation range of 0dB to -74dB. The amount of VCA attenuation is determined by a control voltage, which is applied to the channel terminal (+10VDC provides unity gain; 0VDC provides full attenuation). The control voltage is adjusted with a remote control element. Remote control elements can be potentiometers (for level adjustment) and/or switches (for muting). Potentiometers may be of any resistance from 5k to 50k ohms, with linear taper. Switches may be used alone, or in conjunction with variable or fixed resistors, to provide on/off or muting functions. Control elements can be wired up to 2000 feet away from the RCII module (see Cables: Remote Control on page 20). The RCII provides its own +10 Volt control voltage, but it may be controlled by external control voltages from Advantage DRC 4+4 modules or standard +10 Volt lighting controllers. Channels may be controlled individually, or as stereo pairs, or in groups.

(5) Patch: This 3-conductor 1/4" Phone jack is for connection of outboard processing equipment to the "VCA" channel. It is Post-"VCA", and is wired with Tip being Send, Ring being Return, and Sleeve being Ground. Connection may be made to Patch jacks using a special "Patch" cable (see Cables: Patch on page 20). If a Post-"VCA" channel output is desired, connect to Patch with Tip & Ring being Send, and Sleeve being Ground.

(6) In/Out: This 3-conductor 1/4" Phone jack is for connection of the "VCA" channel to System One modules or other mixers. In/Out jacks are wired with Tip being Input, Ring being Output, and Sleeve being Ground. When using an Advantage ONE/EX, an Advantage AGII, and an Advantage RCII (as an automatic mixer with remote level control), connect Patch jacks of the Advantage AGII to In/Out jacks of the Advantage RCII using standard balanced 1/4" Phone cables (see Applications: 8 Input Automatic Mixer with 4 Channel Remote Control on page 28). This same connection may be made to any mixer having "Patch" jacks identical to the System One modules (see Advantage ONE & EX: Patch on page 5). Connection to In/Out jacks may also be made using a special "Patch" cable (see Cables: Patch on page 20). If only standard unbalanced cables are available, connect to the Advantage RCII using In/Out as the input and Patch as the output.

Frequency Response (20Hz~20kHz @ +4dBu):	+0, -1dB
Total Harmonic Distortion (20Hz~20kHz @ +4dBu):	<0.04%
Hum & Noise (20Hz~20kHz @ unity gain, 150Ω term.):	<-90dBu
Attenuation Range (20Hz~20kHz):	0dB to -74dB
Remote Control Device:	
level potentiometer	5k to 50k ohm linear
mute switch	SPST
Input Impedance:	
channel In/Out (unbalanced)	>10k ohms
channel Patch (unbalanced)	interface dependent
Maximum Input Level:	+19dBu
Output Impedance:	
channel In/Out (unbalanced)	50 ohms
channel Patch (unbalanced)	150 ohms
Maximum Output Level (2kΩ minimum load):	+19dBu
Connectors:	
channel In/Out & Patch	TRS 1/4" phone
controls	barrier strip
DC In & DC Out	6-conductor modular
Indicators:	
power	red LED
Power Requirements (ONE/EX, DRC4+4, or opt. supply):	+/-12VDC @ 50mA
Power Consumption:	6 watts max.
Dimensions:	
height (1 rack space)	1.75 inches (44mm)
width	19 inches (483mm)
depth	4 inches (102mm)
Weight:	4 lbs. (1.81kg)

Advantage RCII Block Diagram

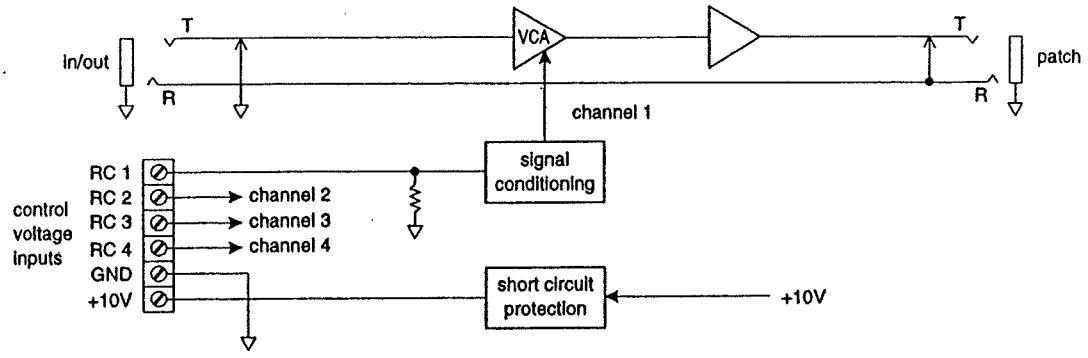

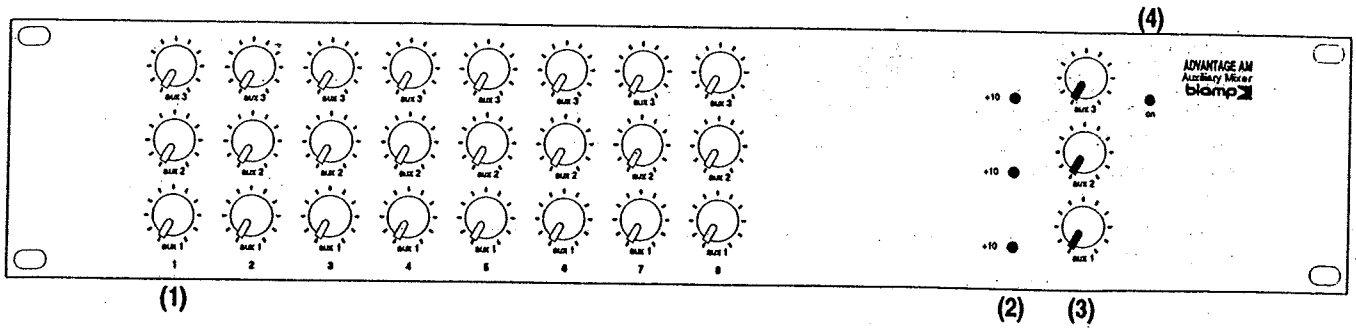

(1) Channel Aux Level: These controls adjust the level of channel signals being sent to each of the Aux Output sections.

(2) +10 Indicators: These red LEDs indicate levels of +10dB (8dB below clipping) at the Aux Outputs on the rear panel. The +10 Indicators should flash only on occasional peaks in signal level. If an indicator flashes steadily, turn down the associated Master Aux Level control to avoid distortion.

(3) Master Aux Level: These controls adjust the overall level of signal sent to the Aux Outputs on the rear panel.

(4) On Indicator: This red LED indicates power is applied to the module (see Advantage AM: DC In on page 15).

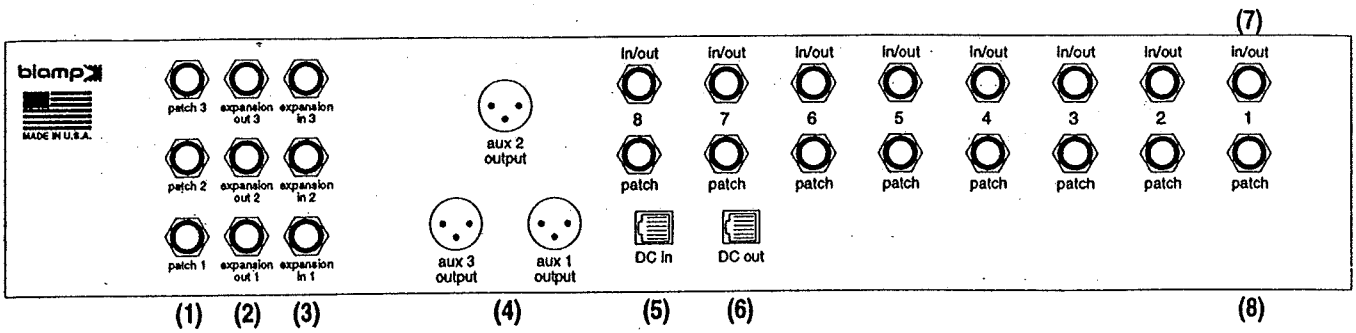

(1) Main Patch: These 3-conductor 1/4" Phone jacks are for connection of outboard processing equipment to the Aux Output sections. The Main Patch jacks are Pre-Master Aux Level, and are wired with Tip being Send, Ring being Return, and Sleeve being Ground. These jacks may be connected to In/Out jacks of other System One modules using standard balanced 1/4" Phone cables (see Applications: 8 Input Automatic Mixer with 3 Auxiliary Sends plus Remote Output Level Control on page 36). Other types of processing equipment may be connected to the Main Patch jack using a special "Patch" cable (see Cables: Patch on page 20).

(2) Expansion Out: These 2-conductor 1/4" Phone jacks provide Pre-Main Patch outputs for connection to additional Advantage AM modules. Expansion Out jacks are wired with Tip being High (+) and Sleeve being Ground. When using multiple Advantage AM modules (to provide Aux Sends for more than 8 channels), connect Expansion Out jacks of one Advantage AM to Expansion In jacks of another Advantage AM using standard unbalanced 1/4" Phone cables (see Expansion In on this page).

(3) Expansion In: These 2-conductor 1/4" Phone jacks provide Pre-Main Patch inputs for connection to additional Advantage AM modules. Expansion In jacks are wired with Tip being High (+) and Sleeve being Ground. When using multiple Advantage AM modules (to provide Aux Sends for more than 8 channels), connect Expansion In jacks of one Advantage AM to Expansion Out jacks of another Advantage AM using standard unbalanced 1/4" Phone cables (see Applications: 16 Input Mixer with 3 Auxiliary Sends on page 34).

(4) Aux Outputs: These 3-pin XLR jacks provide electronically balanced Aux Outputs for connection to amplification systems, effects devices, recorders, or other mixing systems. Aux Outputs are wired to the DIN standard, with Pin 2 being High (+), Pin 3 being Low (-), and Pin 1 being Ground. If unbalanced output is desired, connect to Aux Outputs with Pin 2 being High (+), and both Pin 3 & Pin 1 being Ground.

(5) DC In: This Modular jack accepts +/-12 Volt DC power from other System One modules. When using an Advantage ONE/EX with an Advantage AM (to provide aux sends), connect DC Out of the Advantage ONE/EX to DC In of the Advantage AM (see Cables: Modular on page 20). The Advantage AM receives power only when the Advantage ONE/EX Power Switch is turned on. When using an Advantage AM with other mixers, a separate power supply is necessary (see Accessories: External Power Supply on page 22).

(6) DC Out: This Modular jack supplies +/-12 Volt DC power to other System One modules. When using an Advantage ONE/EX with two Advantage AM modules (to provide six aux sends), connect DC Out of the first Advantage AM to DC In of the second Advantage AM (see Applications: 8 Input Mixer with 6 Auxiliary Sends on page 35). An Advantage ONE/EX is capable of supplying power for up to two additional modules (see Power Considerations on page 21).

(7) In/Out: These 3-conductor 1/4" Phone jacks are for connection of the Advantage AM channels to System One modules or other mixers. In/Out jacks are wired with Tip being Input, Ring being Output, and Sleeve being Ground. When using an Advantage ONE/EX with an Advantage AM (to provide aux sends), connect Patch jacks of the Advantage ONE/EX to In/Out jacks of the Advantage AM using standard balanced 1/4" Phone cables (see Applications: 16 Input Mixer with 3 Auxiliary Sends on page 34). This same connection may be made to any mixer having "Patch" jacks identical to the System One modules (see Advantage ONE & EX: Patch on page 5). (See also Applications: Other Mixers with 3 Auxiliary Sends plus External Processing on page 37.) Connection to In/Out jacks may also be made using a special "Patch" cable (see Cables: Patch on page 20). If only standard unbalanced cables are available, connect to the Advantage AM using In/Out as the input and Patch as the output.

(8) Patch: These 3-conductor 1/4" Phone jacks are for connection of outboard processing equipment to the Advantage AM channels. Patch jacks are wired with Tip being Send, Ring being Return, and Sleeve being Ground. These jacks are independent from the Channel Aux Level controls, so any signal processing inserted into the Patch jacks will not affect the Aux Sends. However, if signal processing is desired on the Aux Sends, it may either be connected to Main Patch jacks, or installed ahead of the Advantage AM in the signal path (see Applications: 8 Input Automatic Mixer with 3 Auxiliary Sends plus Remote Output Level Control on page 36). Other types of processing equipment may be connected to the Patch jacks using a special "Patch" cable (see Cables: Patch on page 20).

Frequency Response (20Hz-20kHz @ +4dBu):	+0, -1dB
Total Harmonic Distortion 20Hz-20kHz @ +4dBu):	<0.015%
Hum & Noise (20Hz-20kHz):	
residual output noise (levels down)	-100dBu
one channel & master @ unity gain	-82dBu
all channels & master @ unity gain	-67dBu
Crosstalk (channel-to-channel @ 20Hz-20kHz):	-80dB
Input Impedance:	
channel In/Out (unbalanced)	10k ohms
channel Patch (unbalanced)	interface dependent
master Patch (unbalanced)	10k ohms
Expansion In (unbalanced)	10k ohms
Output Impedance:	
channel In/Out (unbalanced)	interface dependent
channel Patch (unbalanced)	interface dependent
master Aux Outputs (balanced)	200 ohms
master Patch (unbalanced)	50 ohms
Expansion Out (unbalanced)	50 ohms
Maximum Input Level:	+18dBu
Maximum Output Level:	+18dBu
Connectors:	
channel In/Out & Patch	TRS 1/4" phone
master Aux Outputs	XLR
master Patch	TRS 1/4" phone
Expansion In & Out	TS 1/4" phone
DC In & DC Out	6-conductor modular
Indicators:	
master peak (+10)	red LED
power	red LED
Power Requirements (from ONE/EX or opt. supply):	+/-12VDC @ 80mA
Power Consumption:	10 watts max.
Dimensions:	
height (2 rack space)	3.5 inches (89mm)
width	19 inches (483mm)
depth	5.1 inches (130mm)
Weight:	5 lbs. (2.27kg)

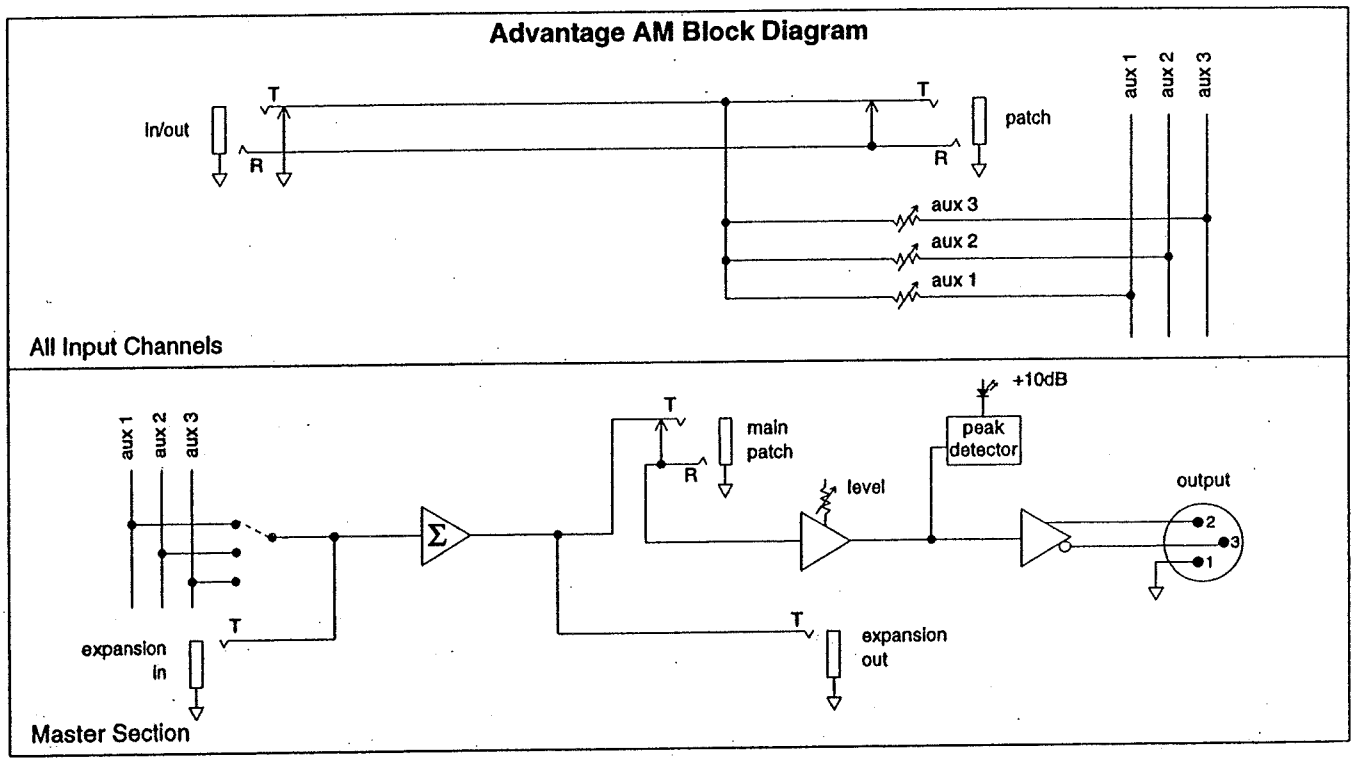
Advantage AM Block Diagram
in/out
T
R
T
R
patch
aux 1
aux 2
aux 3
aux 3
aux 2
aux 1
All Input Channels
aux 1
aux 2
aux 3
T
R
main
patch
+10dB
peak
detector
level
output
2
3
1
Σ
T
expansion
in
T
expansion
out
Master Section

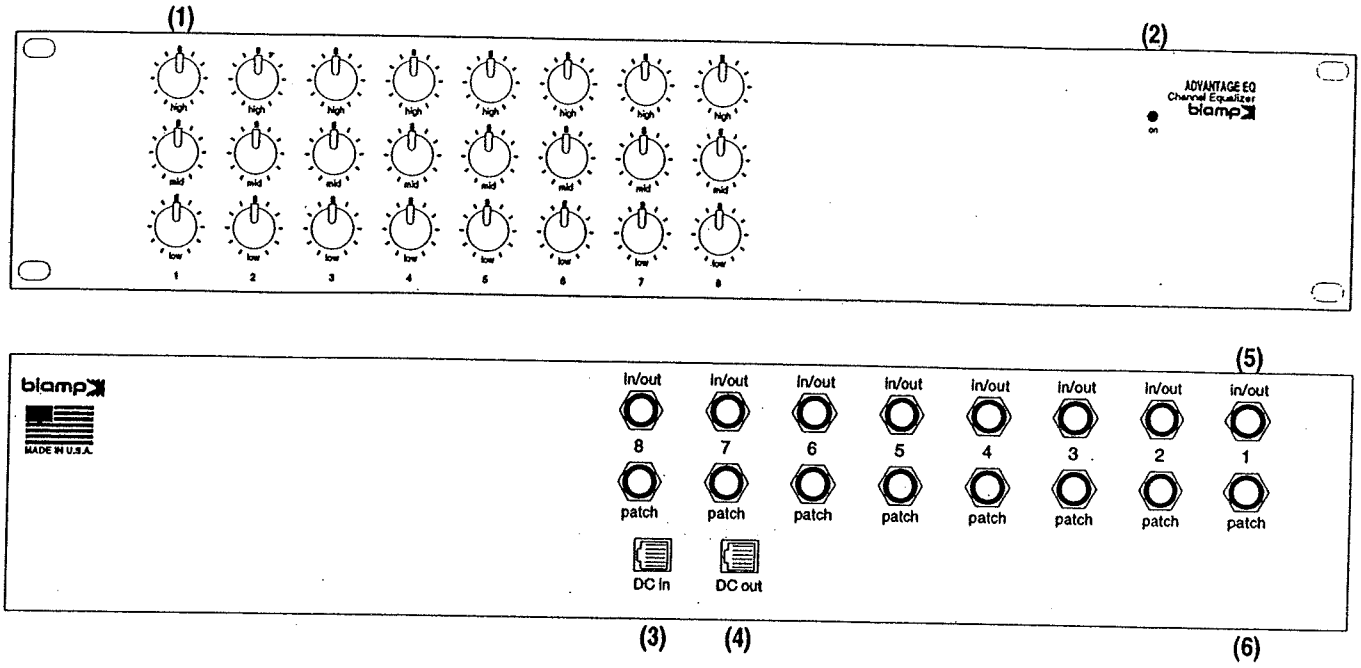

(1) High, Mid, & Low (Channel Equalization): These controls adjust the level of high, mid, and low frequency equalization for each channel. The High control provides shelving equalization, with a maximum cut/boost of +/-12dB @ 10kHz. The Mid control provides peaking equalization, with a maximum cut/boost of +/-12dB @ 2kHz. The Low control provides shelving equalization, with a maximum cut/boost of +/-12dB @ 100Hz.

(2) On Indicator: This red LED indicates power is applied to the module (see DC In on this page).

(3) DC In: This Modular jack accepts +/-12 Volt DC power from other System One modules. When using an Advantage ONE/EX with an Advantage EQ (to provide channel equalization), connect DC Out of the Advantage ONE/EX to DC In of the Advantage EQ (see Cables: Modular on page 20). The Advantage EQ receives power only when the Advantage ONE/EX Power Switch is turned on. When using an Advantage EQ with other mixers, a separate power supply is necessary (see Accessories: External Power Supply on page 22).

(4) DC Out: This Modular jack supplies +/-12 Volt DC power to other System One modules. When using an Advantage ONE/EX, an Advantage AM, and an Advantage EQ (to provide aux sends and channel equalization), connect DC Out of the Advantage EQ to DC In of the Advantage AM (see Applications: 8 Input Mixer with 3-Band EQ plus 3 Auxiliary Sends on page 40). An Advantage ONE/EX is capable of supplying power for up to two additional modules (see Power Considerations on page 21).

(5) In/Out: These 3-conductor 1/4" Phone jacks are for connection of the Advantage EQ channels to System One modules or other mixers. In/Out jacks are wired with Tip being Input, Ring being Output, and Sleeve being Ground. When using an Advantage ONE/EX with an Advantage EQ (to provide channel equalization), connect Patch jacks of the Advantage ONE/EX to In/Out jacks of the Advantage EQ using standard balanced 1/4" Phone cables (see Applications: 16 Input Mixer with 3-Band EQ on page 39). This same connection may be made to any mixer having "Patch" jacks identical to the System One modules (see Advantage ONE & EX: Patch on page 5). Connection to In/Out jacks may also be made using a special "Patch" cable (see Cables: Patch on page 20). If only standard unbalanced cables are available, connect to the Advantage EQ using In/Out as the input and Patch as the output.

(6) Patch: These 3-conductor 1/4" Phone jacks are for connection of outboard processing equipment to the Advantage EQ channels. Patch jacks are wired with Tip being Send, Ring being Return, and Sleeve being Ground. These jacks are Post-Channel Equalization, so any signal processing inserted into the Patch jacks will receive equalized signal. However, if signal processing is desired before equalization, it may be installed ahead of the Advantage EQ in the signal path (see Applications: 8 Input Automatic Mixer with 3-Band EQ on page 38). Other types of processing equipment may be connected to the Patch jacks using a special "Patch" cable (see Cables: Patch on page 20). If only standard unbalanced cables are available, connect to the Advantage EQ using In/Out as the input and Patch as the output.

Equalization:	
high (shelving)	+/-12dB @ 10kHz
mid (peaking)	+/-12dB @ 2kHz
low (shelving)	+/-12dB @ 100Hz
Frequency Response (20Hz-20kHz @ +4dBu):	+0, -1dB
Total Harmonic Distortion (20Hz-20kHz @ +4dBu):	<0.01%
Hum & Noise (20Hz-20kHz @ +4dBu):	-90dBu
Crosstalk (channel-to-channel @ 20Hz-20kHz):	-80dB
Input Impedance:	
channel In/Out (unbalanced)	10k ohms
channel Patch (unbalanced)	interface dependent
Output Impedance:	
channel In/Out (unbalanced)	50 ohms
channel Patch (unbalanced)	50 ohms
Maximum Input Level:	+18dBu
Maximum Output Level:	+18dBu
Connectors:	
channel In/Out & Patch	TRS 1/4" phone
DC In & DC Out	6-conductor modular
Indicators:	
power	red LED
Power Requirements (from ONE/EX or opt. supply):	+/-12VDC @ 45mA
Power Consumption:	6 watts max.
Dimensions:	
height (2 rack spaces)	3.5 inches (89mm)
width	19 inches (483mm)
depth	5.1 inches (130mm)
Weight:	5 lbs. (2.27kg)

Advantage EQ Block Diagram

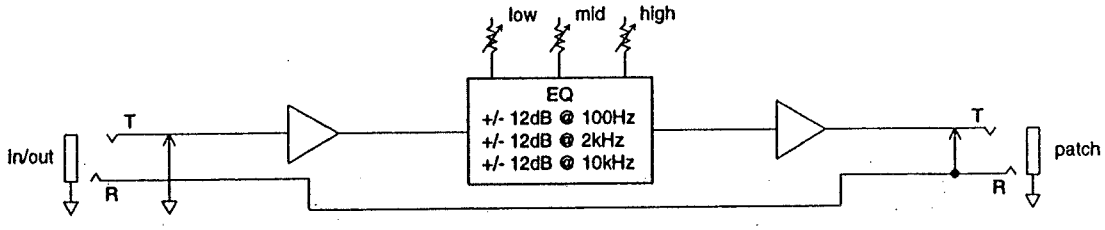

All Input Channels

3-Conductor TRS 1/4" Phone ("balanced"): This type of cable uses Tip/Ring/Sleeve (TRS) 1/4" Phone connectors on each end and is wired Tip to Tip, Ring to Ring, and Sleeve to Sleeve (ground). Cable should be 2-conductor with shield. These cables are used to connect In/Out jacks to Patch jacks within a system using Biamp and Advantage products (and any mixers having identical Patch jacks). These cables are available from Biamp Systems (#909-0013-00: four 3-conductor TRS 1/4" Phone cables, plus one 6-pin Modular cable).

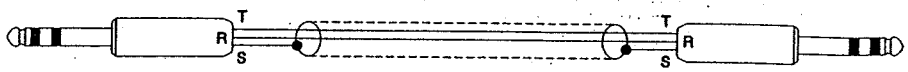

Balanced XLR: This type of cable uses a male XLR connector on one end and a female XLR connector on the other end. It is wired Pin 2 to Pin 2, Pin 3 to Pin 3, and Pin 1 to Pin 1 (ground). Cable should be 2-conductor with shield. Balanced XLR cables are used to connect Advantage EX Main Out jacks to Advantage ONE Main Stack jacks, and for other System One balanced outputs.

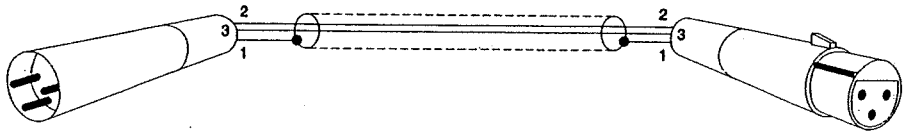

Patch: This type of cable uses a Tip/Ring/Sleeve (TRS) 1/4" Phone connector on one end and Tip/Sleeve (TS) 1/4" Phone (or RCA) connectors on the other two ends. It is wired with Tip A to Tip B, Ring A to Tip C, and Sleeve A to both Sleeves B & C (ground). Cable should be 1-conductor with shield. These cables are used primarily for connecting In/Out or Patch jacks of Biamp and Advantage products to other types of equipment. When connecting to an In/Out jack, Tip B is the input and Tip C is the output. When connecting to a Patch jack, Tip B is the send and Tip C is the return. This type of cable may also be used to connect an Advantage AGII Aux Out jack to both the left & right inputs of a stereo tape deck, for recording (mono signal).

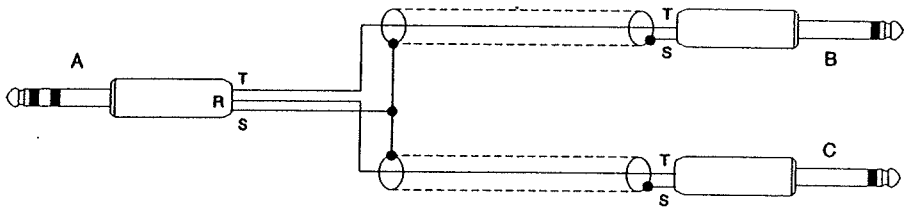

6-Pin Modular: This type of cable uses a 6-pin Modular connector on both ends, and is used to connect DC Out jacks to DC In jacks within a system using Advantage products. DC Out jacks provide +/-12 Volts DC power to DC In jacks of Advantage products which require external power. These cables are provided with Advantage products which require +/-12 Volts DC input. These cables are also available from Biamp (#909-0013-00: one 6-pin Modular cable, plus four 3-conductor TRS 1/4" Phone cables). Standard telephone type cables will not work for this application. Modular cables are also used to inter-connect multiple Advantage AGII AG Expansion jacks.

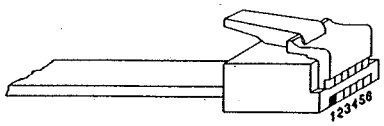

Remote Control: When using a slide potentiometer as the remote control, wire with High (T) to control voltage (+10V), Wiper (W) to channel (RC 1~4), and Low (B) to ground (gnd). When using a rotary potentiometer as the remote control, wire with High (CW) to control voltage (+10V), Wiper (W) to channel (RC 1~4), and Low (CCW) to ground (gnd). Potentiometers should be linear taper, of any value from 5k ohms to 50k ohms, and may be wired up to 2000 feet from the Advantage RCII module. Cable should be 2-conductor with shield. If an on/off switch is utilized, "ON" position should connect control voltage (+10V) to channel (RC 1~4). Fixed or variable resistors may be used in conjunction with a switch to provide level & mute functions, or simply for adjustment of desired muting levels.

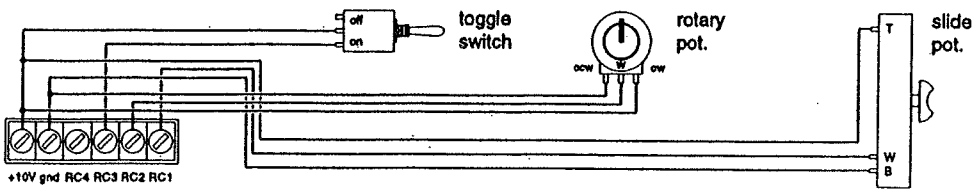

POWER CONSIDERATIONS

The following tables show the power required by the individual System One modules, and the power available from their normal power sources. Advantage AGII, RCII, AM, & EQ modules receive power at their DC In jacks. Advantage ONE, EX, GM, & DRC 4+4 modules supply power from their DC Out jacks. The number of modules that a power source can accommodate depends upon the current capability of the power source and the current requirements of the associated modules. Power sources can normally power up to two additional modules. When using more System One modules than the available power sources can accommodate, or when using non-powered System One modules independently, an External Power Supply is available from Biamp Systems (#909-0011-00).

System One Module Current Requirements
(current required from each supply: +/-12VDC)

module	typical	maximum
Advantage AGII	80 mA	100 mA
Advantage RCII	45 mA	50 mA
Advantage AM	55 mA	80 mA
Advantage EQ	40 mA	45 mA

System One Power Source Current Capabilities
(current available from each supply: +/-12VDC)

power source	110 VAC line voltage		115 VAC line voltage		120 VAC line voltage	
(module)	typical	minimum	typical	minimum	typical	minimum
Advantage ONE	110 mA	75 mA	165 mA	130 mA	250 mA	215 mA
Advantage EX	135 mA	110 mA	190 mA	165 mA	275 mA	250 mA
Advantage GM	115 mA	95 mA	180 mA	160 mA	250 mA	215 mA
Advantage DRC 4+4	150 mA	130 mA	225 mA	200 mA	280 mA	250 mA
External Power Supply		130 mA		165 mA		185 mA

NOTE: Current capability of an Advantage ONE or EX mixer may be reduced significantly when using phantom power (+12V or +48V). Worst case: Optional +48V Phantom Power Supply with eight mics drawing 5mA each reduces current capability by as much as 50mA.

To access internal modifications: A) remove any power connections to the module; B) place the module on a flat surface with the bottom panel facing up, and the front panel facing away; C) remove all screws from bottom panel; D) remove bottom panel.

Modifications

Channel 8 "Ducking": A jumper strap is provided on Channels 1~7 (Advantage ONE only) to allow signal present in those channels to mute Channel 8 by 15dB ("ducking"). This is useful in Public Address systems, where "page-over-music" is desired (see Applications: 8 Input Automatic Mixer with Channel 8 "Ducking" on page 26). Any or all of Channels 1~7 may be selected to trigger Channel 8 "Ducking". When signal is no longer present in selected Channels 1~7, Channel 8 signal level gradually returns to normal. To select Channels 1~7 for Channel 8 "Ducking", move jumper straps W101~W701 towards the rear panel (W101 is Channel 1, W201 is Channel 2, etc.). See Diagram A on next page.

EQ Bypass: A jumper strap is provided to allow the Bass & Treble EQ section (Advantage ONE only) to be bypassed. To bypass EQ, move W902 towards the rear panel. See Diagram A on next page. This does not bypass the Variable Notch Filters.

Phantom Power: A jumper strap is provided on Channels 1~8 (Advantage ONE & EX) to allow assignment of Phantom Power. Any or all of Channels 1~8 may be assigned Phantom Power by moving W110~W810 towards the front panel (W110 is Channel 1, W210 is Channel 2, etc.). See Diagram A on next page. Internal Phantom Power is +12 Volts, however, an external +48 Volt supply is available from Biamp Systems (see Accessories: +48V Phantom Power Supply on this page).

AG Expansion: When more than one Advantage AGII module is used in a system, their AG Expansion jacks are connected together to allow transfer of information. This information is processed only by the Advantage AGII that is connected to the Advantage ONE (master) module. Therefore, jumper J901 (0 ohm resistor) must be removed from all other Advantage AGII modules, to avoid system errors. Jumper J901 is located directly in front of the AG Expansion jack. See Diagram B on next page.

Accessories

Input Transformers: Positions are provided on the Advantage ONE & EX circuit boards for installation of Input Transformers. Any or all of Channels 1~8 may have Input Transformers installed. To install transformers, solder them into positions T101~T801, with Pin 1 (black stripe) located at the square pad (T101 is Channel 1, T201 is Channel 2, etc.). Leave approximately 1/8" space between circuit board and transformer can. When transformers are installed, three jumpers (0 ohm resistors) and two resistors (2.2k ohms) per channel will need to be removed. Remove W102~W802, W103~W803, W104~W804, R130~R830, and R131~R831 (W102~W104 are Channel 1, W202~W204 are Channel 2, etc.). See Diagram A on next page. Input Transformers are available from Biamp Systems (#909-0010-01).

+48V Phantom Power Supply: The internal +12 Volt Phantom Power of the Advantage ONE & EX may not be sufficient power for some condenser microphones. When using condenser microphones that require +48 Volt Phantom Power, an external power supply may be added to convert Phantom Power to +48 Volts. To connect the external +48 Volt Phantom Power Supply: A) remove the detachable power transformer from the Advantage ONE/EX module by separating the 5-pin DIN connection in the AC Power Cord; B) insert the +48V Phantom Power Supply into the AC Power Cord (between the power transformer & the Advantage ONE/EX module) using the 5-pin DIN connectors provided; C) move jumper strap W901 towards the rear panel (selects "external" Phantom Power); D) assign Phantom Power to desired channels (see Modifications: Phantom Power on this page). +48 Volt Phantom Power Supplies are available from Biamp Systems (#909-0012-00).

External Power Supply: When using more System One modules than the available power sources can accommodate (see Power Considerations on page 21), or when using non-powered modules independently, an External Power Supply may be connected to the module DC In jack. External Power Supplies are available from Biamp Systems (#909-0011-00).

AG Expansion Multi-Jack Adapter: When more than one Advantage AGII module is used in a system, their AG Expansion jacks are connected together to allow transfer of information. When only two Advantage AGIIs are used, this connection requires a single Modular cable. When more than two Advantage AGIIs are used, this connection also requires a Multi-Jack Adapter. AG Expansion Multi-Jack Adapters are available from Biamp Systems (#909-0027-00).

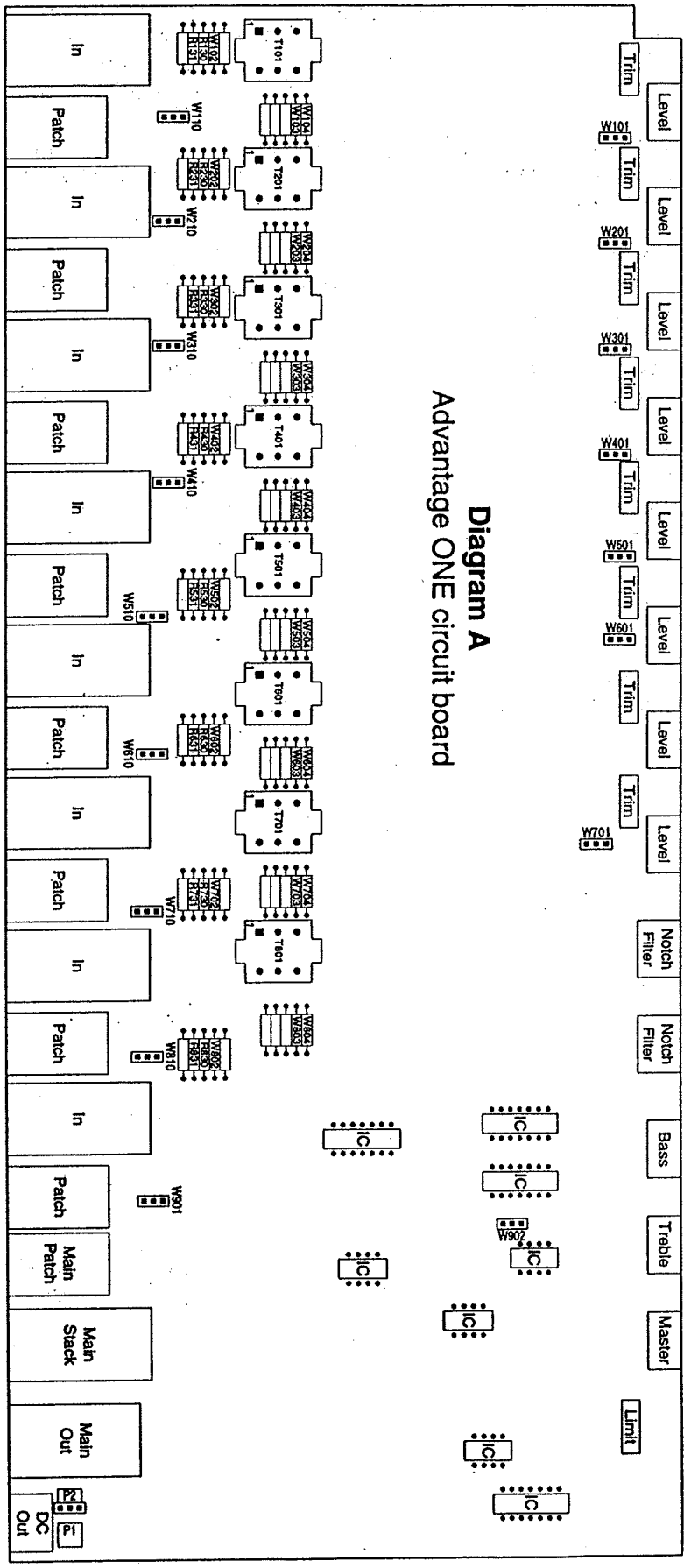

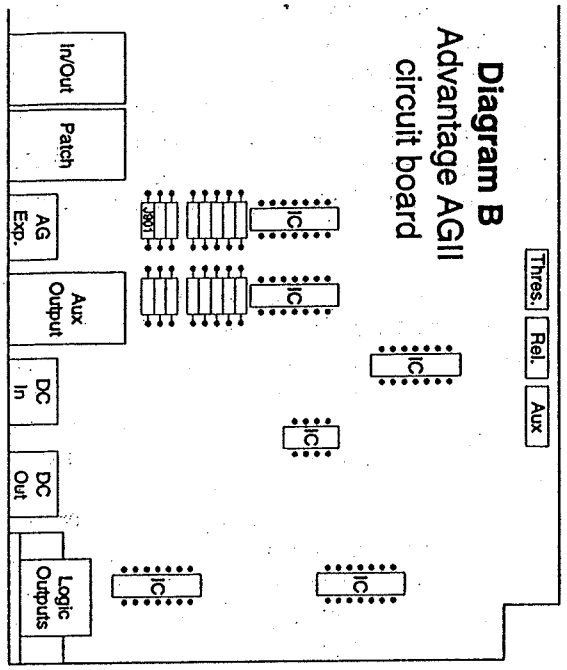

Advantage ONE jumper strap options

Phantom Power (each channel)	W110~W810	off / on
Phantom Supply (+12V or +48V)	W901	external (+48 Volts) / internal (+12 Volts)
Ch. 8 "Ducking" (Ch. 1~7 trigger)	W101~W701	on / off
EQ Bypass (Treble & Bass)	W902	EQ out / EQ in

AGII LOGIC OUTPUTS

The Advantage AGII provides eight logic outputs on a rear panel 9-pin Subminiature D connector. Logic outputs can be used to control external switching circuits (such as relays) for speakers, cameras, lighting, etc. The AGII logic outputs are most often used, in conjunction with external relays, to turn off specific speakers when nearby microphones are active (reducing feedback problems). For example, if a speaker is located directly above microphone #4, the logic output for gate #4 of the AGII can be used to turn off that speaker whenever microphone #4 is active. The logic outputs can also be combined (wired in parallel) to control a single circuit. For example, a particular speaker could be turned off whenever either microphone #4 or microphone #5 is active. Another common application for logic outputs is to control video cameras. Different video cameras could be activated depending upon which microphone (or group of microphones) is currently active.

The Advantage AGII logic outputs are "open collector" outputs. Each logic output is an NPN transistor with the collector being the output and the emitter being ground (see diagram on next page). When a logic output is turned on, the transistor provides a path for DC current to flow. The logic outputs do not provide any voltage or current. They act only as switches (with a common ground return). To activate external relays, an external power supply must be used (see diagram on next page). The logic output transistors are rated up to a maximum of 24 VDC and 50 mA per output (24 volt relay coils maximum). However, +12 Volts DC is sufficient power for most applications. When using the logic outputs to control relays, protection diodes must be used to suppress high voltage transients that are generated when the relays turn off (see diagram on next page). Any of the 1N4004 family of diodes (1N4001, 1N4002, 1N4003, 1N4004, 1N4005, 1N4006, 1N4007, or equivalent) will provide proper protection. A 12 Volt Power Supply (#909-0011-00), 12 Volt Relays (#520-0064-00), and 1N4004 Diodes (#190-0003-09) are available from Biamp Systems. When a logic output goes on, the associated relay may be wired to perform on, off, or "A/B" switching functions. To use logic "on" to turn on (or activate) a device, wire across the "normally open" relay contacts, in series with the device (or control voltage source). To use logic "on" to turn off a device (or speaker), wire across the "normally closed" relay contacts, in series with the device (or control voltage source). To use logic "on" to select between "A" or "B" signals (inputs or outputs), wire one to the "normally closed" relay terminal and the other to the "normally open" relay terminal, with the common relay terminal providing the feed (input or output).

The 9-pin Subminiature D connector used for the Advantage AGII logic outputs is the same type of connector used for RS-232 communications ports on IBM compatible personal computers (PCs). Most retail computer stores carry "modem" cables for the IBM PC. These cables have a 9-pin female connector on one end and a 25-pin male connector on the other end. If the cable has full RS-232 modem support, it may be used as a logic output cable for the AGII by simply cutting off the end with the 25-pin connector. A cable that provides full RS-232 modem support will have either 9 conductors or 8 conductors plus a shield. Pin #5 on the AGII was chosen as ground because many of the pre-fabricated modem cables connect pin #5 to the cable shield (IBM AT uses pin #5 as ground). An ohm-meter can be used to easily determine which wires go to which pins in the 9-pin female connector. Of course, a custom cable may be created by simply wiring to the proper pins of a female 9-pin Subminiature D cable-end connector.

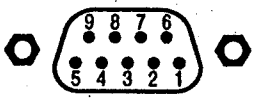

logic outputs

signal	pin number
gate #1	pin #1
gate #2	pin #2
gate #3	pin #3
gate #4	pin #4
ground	pin #5
gate #5	pin #6
gate #6	pin #7
gate #7	pin #8
gate #8	pin #9

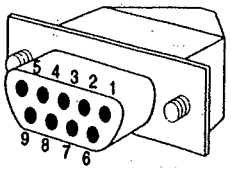

female 9-pin connector

AGII LOGIC OUTPUTS

Logic/Relay Circuit Diagram

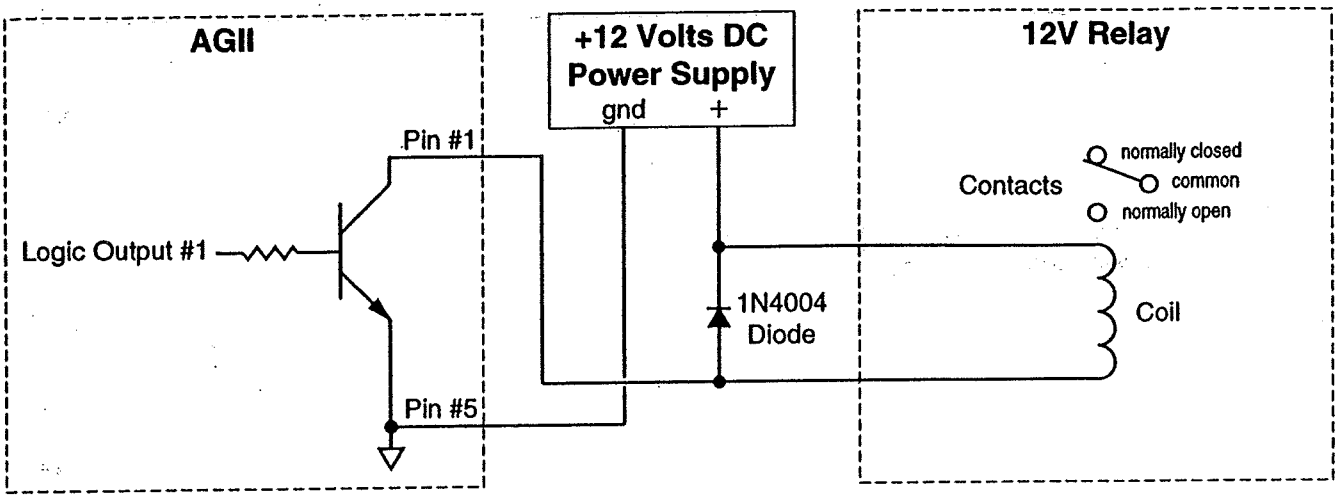

Example: Logic Outputs Controlling Speakers

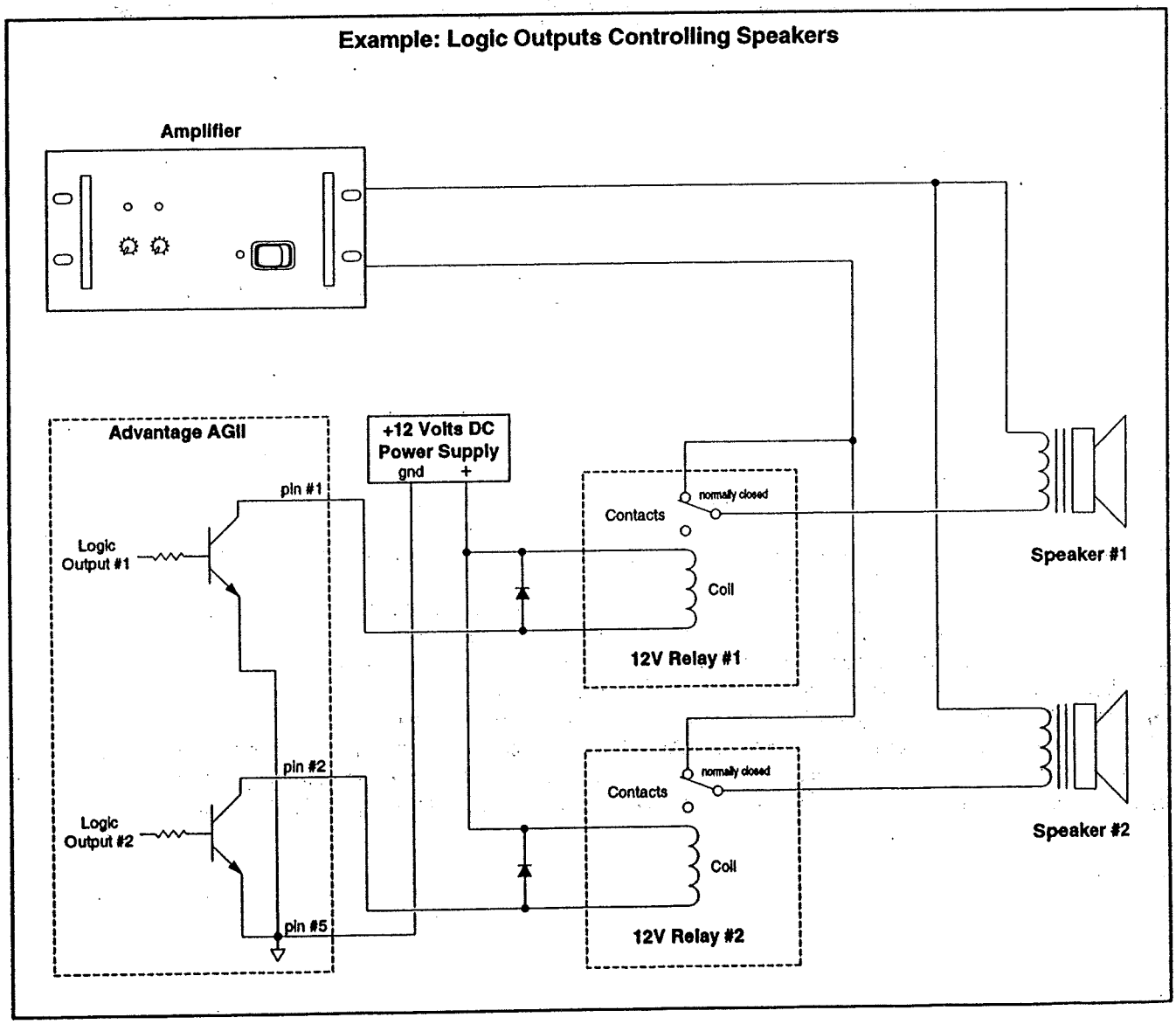

8 Input Automatic Mixer with Channel 8 "Ducking"

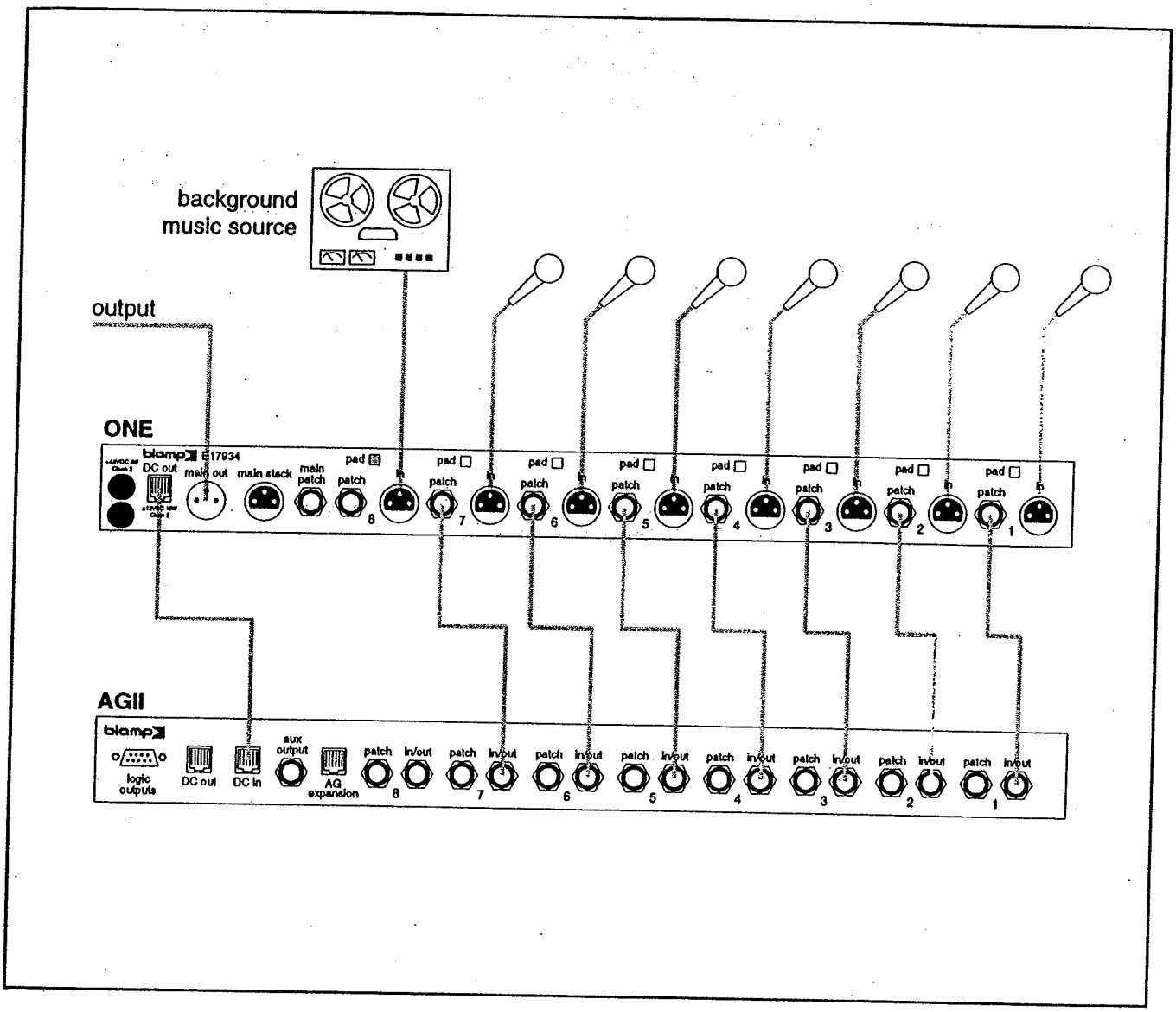

A) Perform Channel 8 "Ducking" modification on Advantage ONE (see Modifications: Channel 8 "Ducking" on page 9).
B) Connect microphones to Channels 1~7 of Advantage ONE.
C) Connect signal to be attenuated (tape, radio, etc.) to Channel 8 of Advantage ONE (see Advantage ONE/EX: In on page 5).
D) Depress Advantage ONE Channel 8 Pad switch (to accommodate line level input signal).
E) Adjust Advantage ONE Trim controls so Peak Indicators (+10) are activated by occasional peaks in signal level.
F) Adjust Advantage ONE Channel and Master Level controls for desired levels.
G) Connect Advantage ONE DC Out jack to Advantage AGII DC In jack using Modular cable.
H) Connect Advantage ONE Patch jacks to Advantage AGII In/Out jacks (Channels 1~7 only) using balanced 1/4" Phone cables.
I) Adjust Advantage AGII Threshold control so channels are easily activated by normal input levels, but not by ambient noise.
J) Other settings as needed (i.e...Advantage ONE Rumble Filter and Phantom Power; Advantage AGII Release Time; etc.).

8 Input Mixer with 8 Channel Remote Control

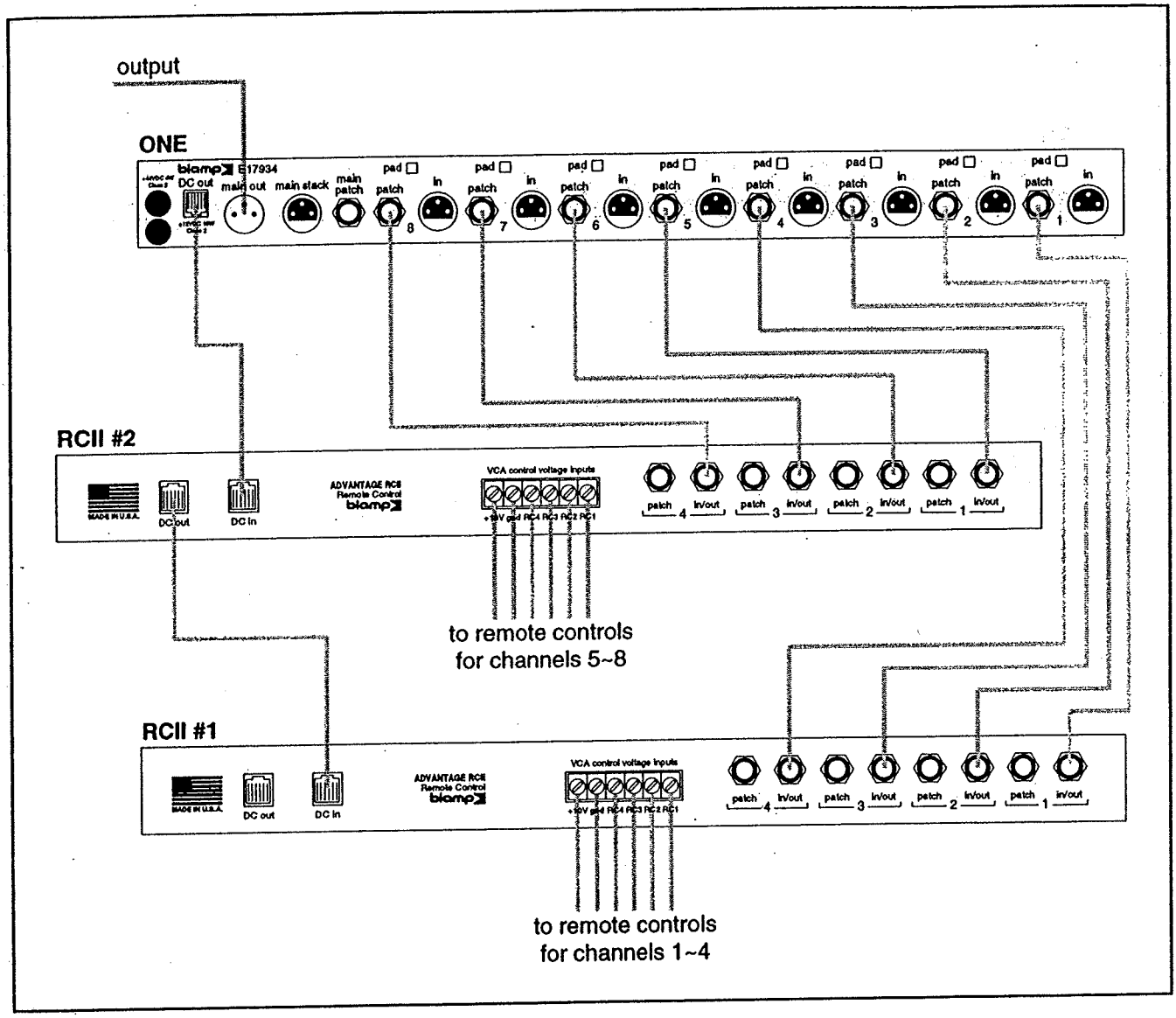

A) Connect mic/line inputs to Channels 1~8 of Advantage ONE (see Advantage ONE/EX: In on page 5).
B) Adjust Advantage ONE Trim controls so Peak Indicators (+10) are activated by occasional peaks in signal level.
C) Adjust Advantage ONE Channel and Master Level controls for desired levels.
D) Connect Advantage ONE DC Out jack to Advantage RCII (#1) DC In jack using Modular cable.
E) Connect Advantage RCII (#1) DC Out jack to Advantage RCII (#2) DC In jack using Modular cable.
F) Connect Advantage ONE Patch jacks to Advantage RCII (#1 & #2) In/Out jacks using balanced 1/4" Phone cables.
G) Connect Remote Controls to Advantage RCII (#1 & #2) VCA Control Voltage Inputs (see Cables: Remote Control on page 20).
H) Other settings as needed (i.e...Advantage ONE Limiter and Bass & Treble EQ; Advantage RCII Remote Controls; etc.).

8 Input Automatic Mixer with 4 Channel Remote Control

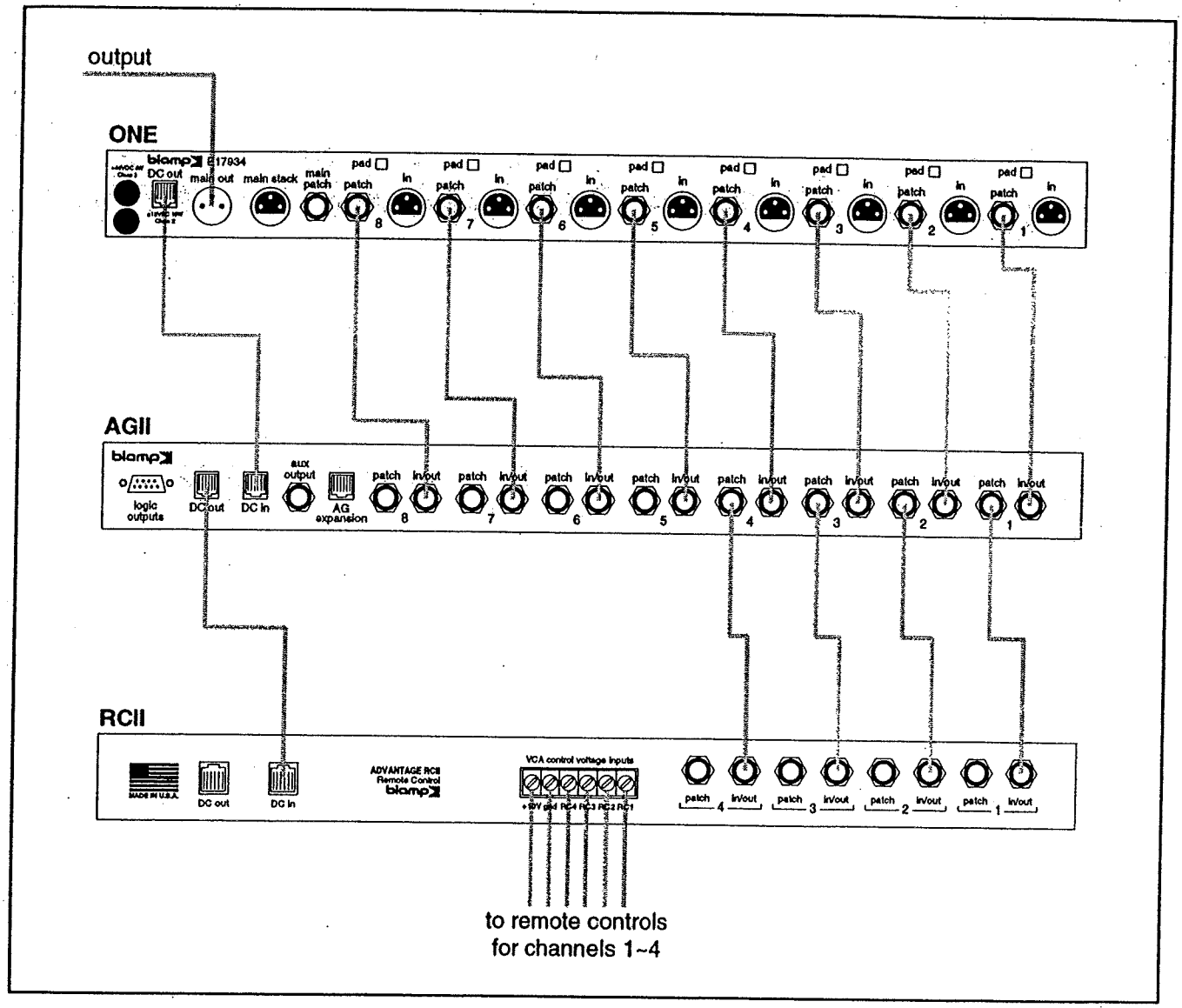

A) Connect microphones to Channels 1~8 of Advantage ONE.
B) Adjust Advantage ONE Trim controls so Peak Indicators (+10) are activated by occasional peaks in signal level.
C) Adjust Advantage ONE Channel and Master Level controls for desired levels.
D) Connect Advantage ONE DC Out jack to Advantage AGII DC In jack using Modular cable.
E) Connect Advantage ONE Patch jacks to Advantage AGII In/Out jacks using balanced 1/4" Phone cables.
F) Adjust Advantage AGII Threshold control so channels are easily activated by normal input levels, but not by ambient noise.
G) Connect Advantage AGII DC Out jack to Advantage RCII DC In jack using Modular cable.
H) Connect Advantage AGII Patch jacks (any four channels) to Advantage RCII In/Out jacks using balanced 1/4" Phone cables.
I) Connect Remote Controls to Advantage RCII VCA Control Voltage Inputs (see Cables: Remote Control on page 20).
J) Other settings as needed (i.e...Advantage ONE Notch Filters; Advantage AGII Priority; Advantage RCII Remote Controls; etc.).

16 Input Automatic Mixer

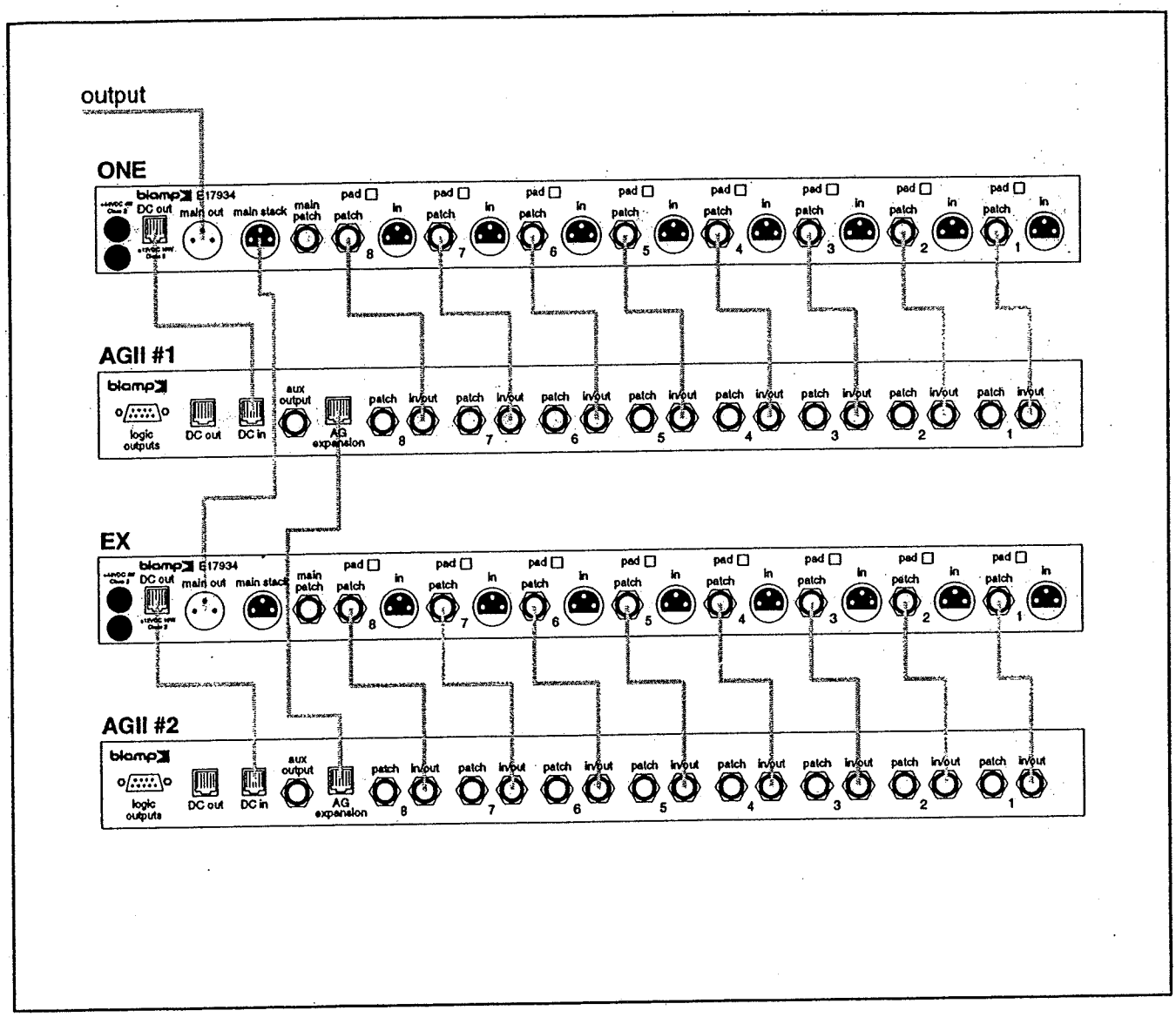

A) Perform AG Expansion modification on Advantage AGII (#2) (see Modifications: AG Expansion on page 22).
B) Connect Advantage EX Main Out jack to Advantage ONE Main Stack jack using balanced XLR cable.
C) Connect microphones to Channels 1~8 of Advantage ONE and Channels 1~8 of Advantage EX.
D) Adjust Advantage ONE/EX Trim controls so Peak Indicators (+10) are activated by occasional peaks in signal level.
E) Adjust Advantage ONE/EX Channel and Master Level controls for desired levels.
F) Connect Advantage ONE DC Out jack to Advantage AGII (#1) DC In jack using Modular cable.
G) Connect Advantage EX DC Out jack to Advantage AGII (#2) DC In jack using Modular cable.
H) Connect Advantage ONE/EX Patch jacks to Advantage AGII (#1 & #2) In/Out jacks using balanced 1/4" Phone cables.
I) Connect Advantage AGII (#1) AG Expansion jack to Advantage AGII (#2) AG Expansion jack using Modular cable.
J) Adjust Advantage AGII (#1 & #2) Threshold controls so channels are easily activated by normal input levels, but not by ambient noise.
K) Other settings as needed (i.e...Advantage ONE EQ Bypass and Rumble Filter; Advantage AGII Release Time; etc.).

32 Input Mixer

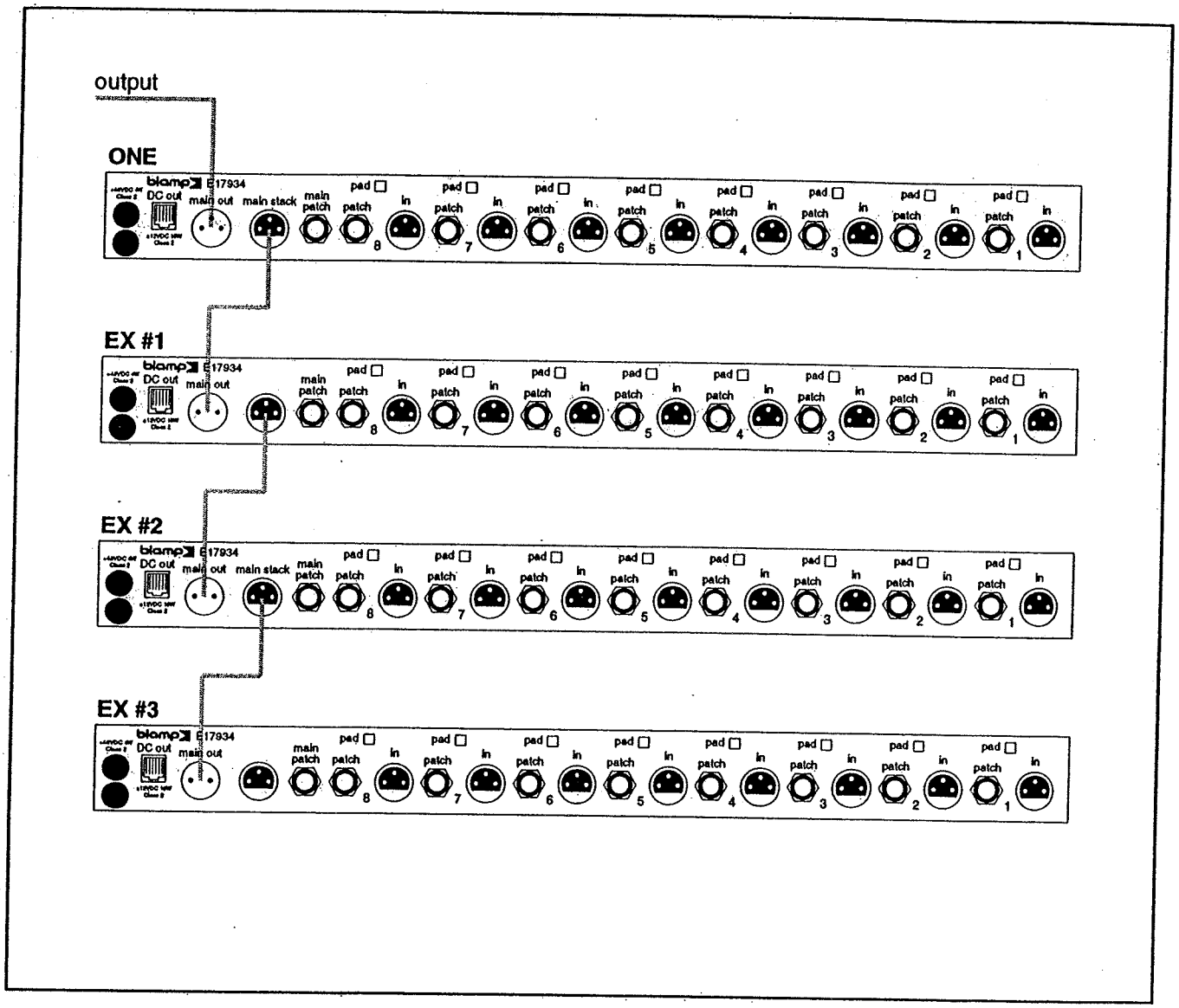

A) Connect Advantage EX (#3) Main Out jack to Advantage EX (#2) Main Stack jack using balanced XLR cable.
B) Connect Advantage EX (#2) Main Out jack to Advantage EX (#1) Main Stack jack using balanced XLR cable.
C) Connect Advantage EX (#1) Main Out jack to Advantage ONE Main Stack jack using balanced XLR cable.
D) Connect mic/line inputs to Channels 1~8 of Advantage ONE and Channels 1~8 of all Advantage EX modules.
E) Adjust Advantage ONE/EX Trim controls so Peak Indicators (+10) are activated by occasional peaks in signal level.
F) Adjust Advantage ONE/EX Channel and Master Level controls for desired levels.
G) Other settings as needed (i.e.,.Advantage ONE Limiter and Bass & Treble EQ; Advantage ONE/EX Phantom Power; etc.).

8 Input Automatic Mixer plus 8 Input Submixer with Remote Control

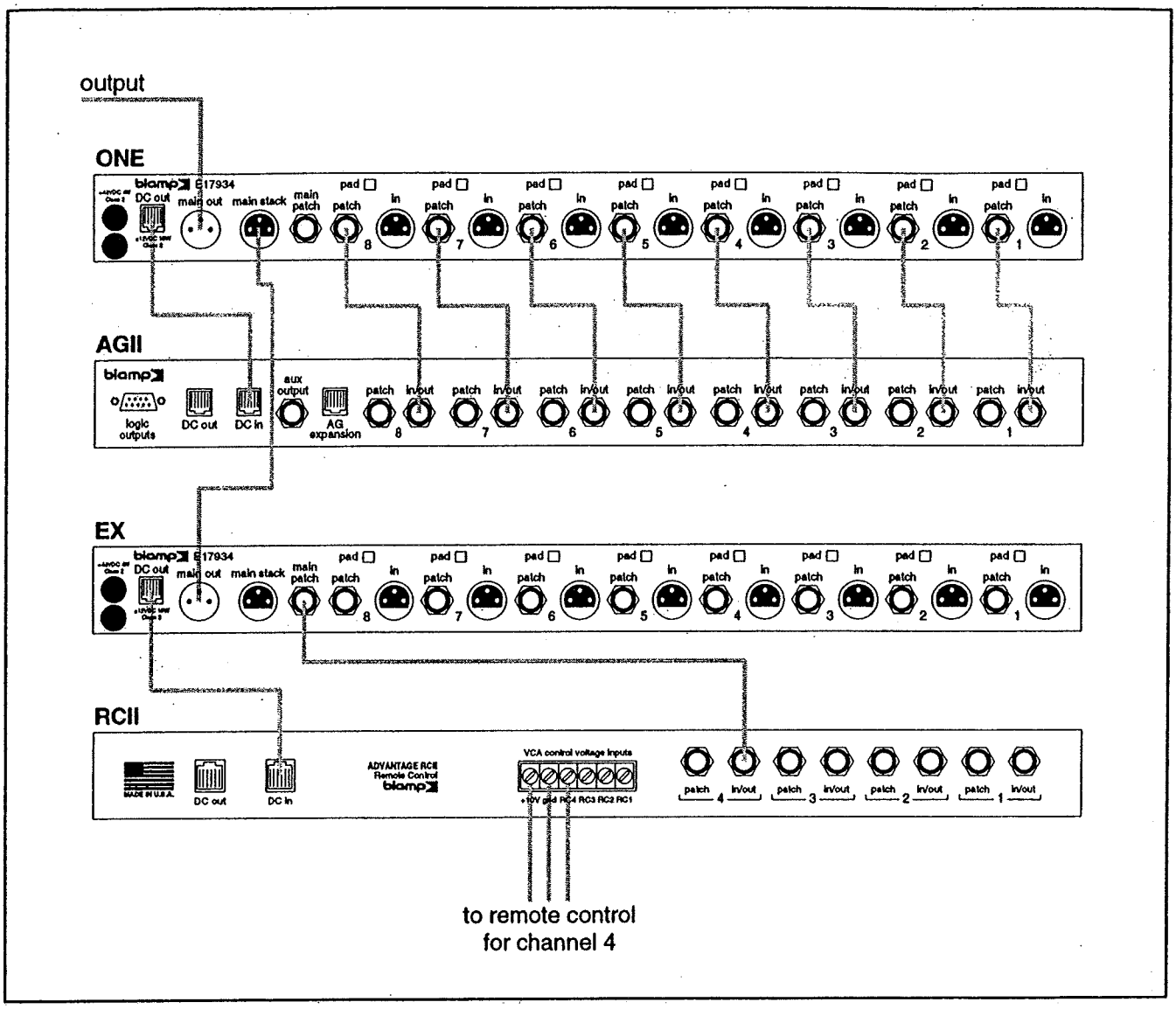

A) Connect Advantage EX Main Out jack to Advantage ONE Main Stack jack using balanced XLR cable.
B) Connect microphones to Channels 1~8 of Advantage ONE and Channels 1~8 of Advantage EX.
C) Adjust Advantage ONE/EX Trim controls so Peak Indicators (+10) are activated by occasional peaks in signal level.
D) Adjust Advantage ONE/EX Channel and Master Level controls for desired levels.
E) Connect Advantage ONE DC Out jack to Advantage AGII DC In jack using Modular cable.
F) Connect Advantage ONE Patch jacks to Advantage AGII In/Out jacks using balanced 1/4" Phone cables.
G) Adjust Advantage AGII Threshold control so channels are easily activated by normal input levels, but not by ambient noise.
H) Connect Advantage EX DC Out jack to Advantage RCII DC In jack using Modular cable.
I) Connect Advantage EX Main Patch jack to Advantage RCII In/Out jack (any channel) using balanced 1/4" Phone cables.
J) Connect Remote Control to Advantage RCII VCA Control Voltage Input (see Cables: Remote Control on page 20).
K) Other settings as needed (i.e...Advantage ONE Rumble Filter; Advantage AGII Release Time; Advantage RCII Remote Control; etc.).

8 Input Mixer with External Signal Processing

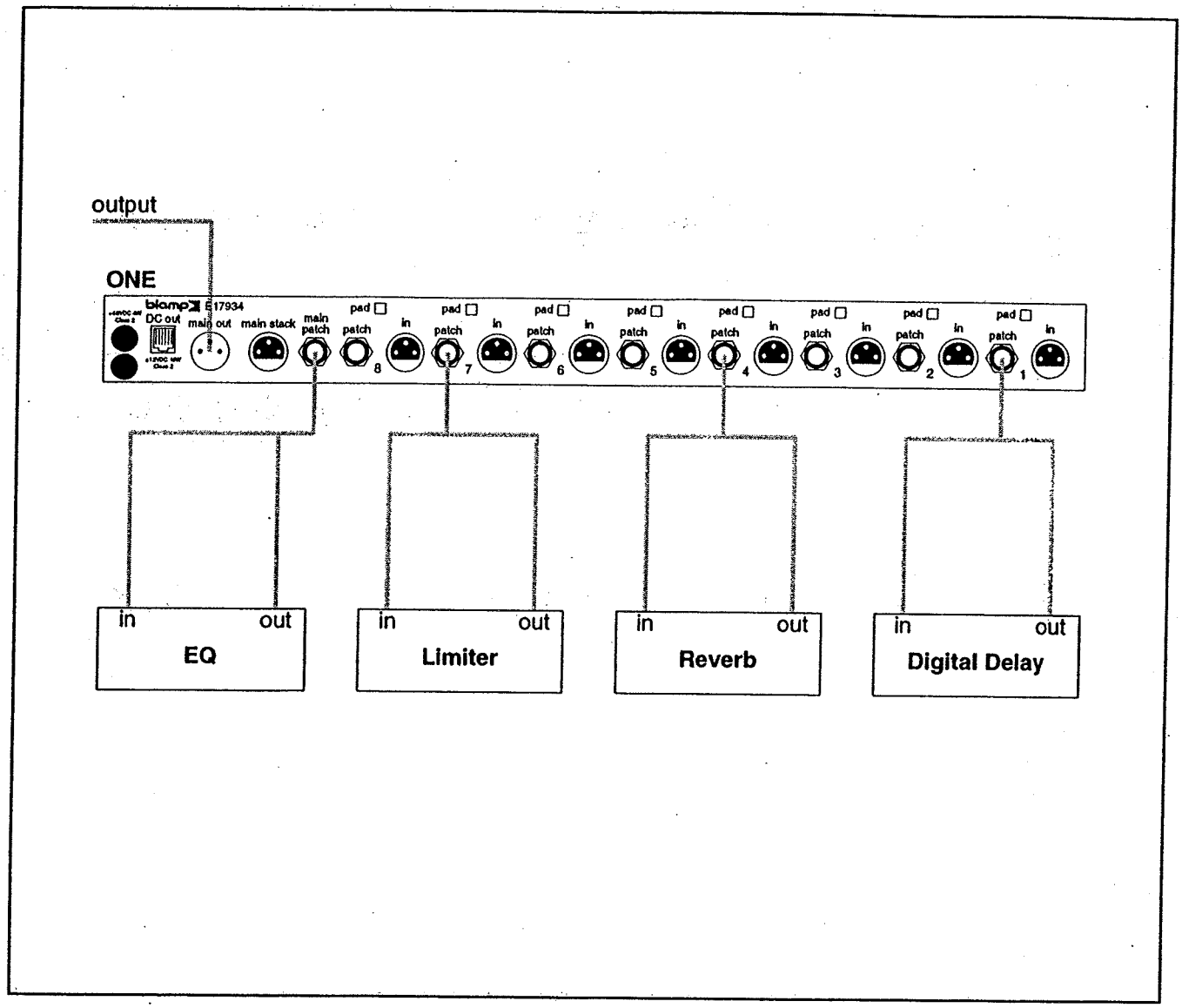

A) Connect mic/line inputs to Channels 1~8 of Advantage ONE (see Advantage ONE/EX: In on page 5).
B) Adjust Advantage ONE Trim controls so Peak Indicators (+10) are activated by occasional peaks in signal level.
C) Connect Advantage ONE Patch and Main Patch jacks to In & Out jacks of signal processing devices (see Cables: Patch on page 20).
D) Adjust parameters of signal processing devices (i.e...Input Level, Program, Mix/Blend, Output Level, etc.).
E) Adjust Advantage ONE Channel and Master Level controls for desired levels.
F) Other settings as needed (i.e...Advantage ONE Limiter, Phantom Power, and Bass & Treble EQ; etc.).

8 Channel Noise Gate with Other Mixers

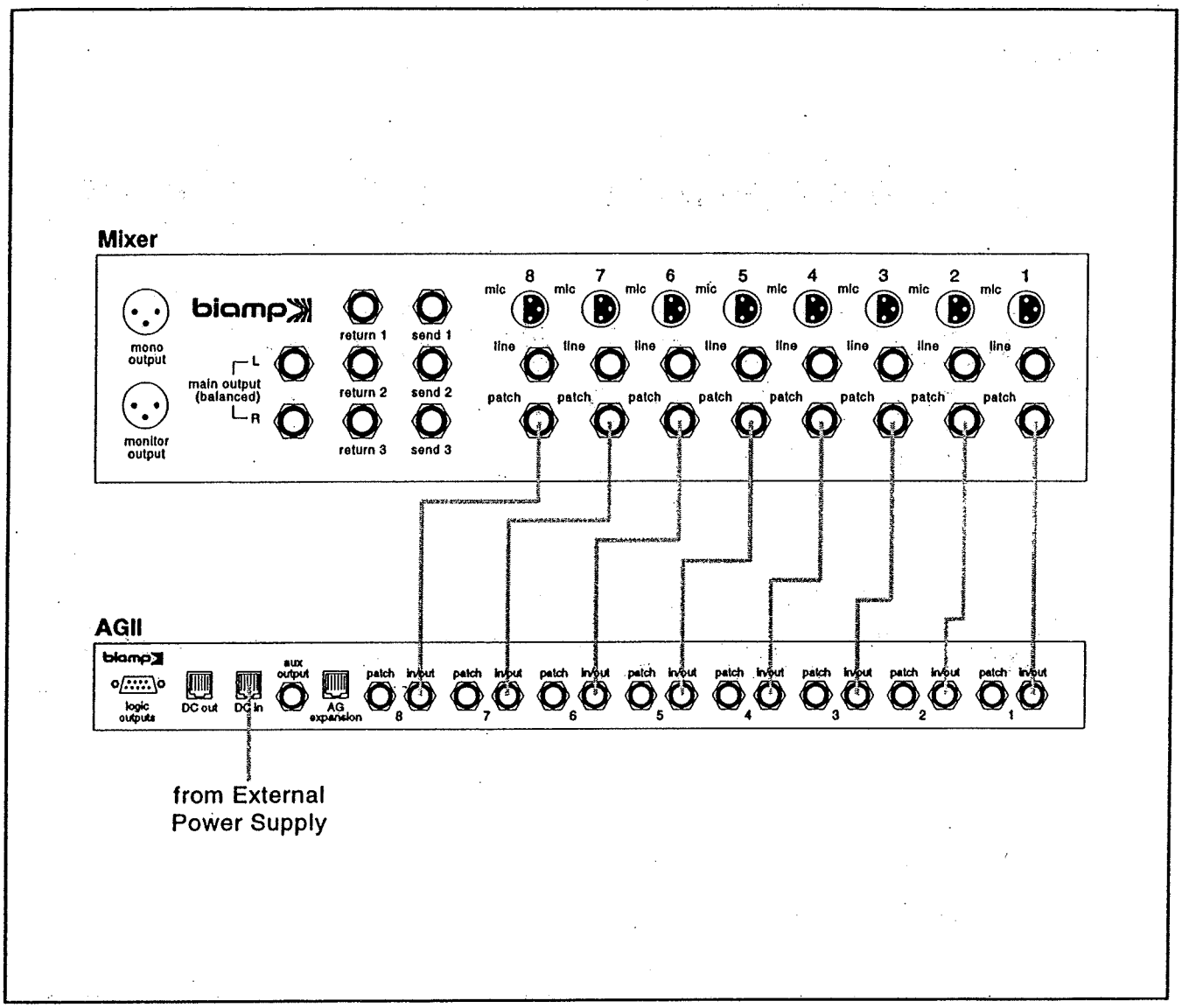

A) Connect External Power Supply to Advantage AGII DC In jack (see Accessories: External Power Supply on page 22).
B) Connect mic/line inputs to mixer.
C) Adjust channel "Trim" controls of mixer for proper signal levels (signals should be of equal level at channel "Patch" jacks).
D) Connect "Patch" jacks of mixer to Advantage AGII In/Out jacks (see Advantage AGII: In/Out on page 9).
E) Adjust Advantage AGII Threshold control so channels are activated by normal input levels, but not by ambient noise.
F) Adjust "Channel" and "Master" level controls of mixer for desired levels.
G) Other settings as needed (i.e...Advantage AGII Release Time, Priority, and Aux Level; etc.).

NOTE: When using an Advantage AGII with mixers other than an Advantage ONE, "NOM Attenuation" does not occur. Therefore, the above application is not considered a complete "automatic mixer".

16 Input Mixer with 3 Auxiliary Sends

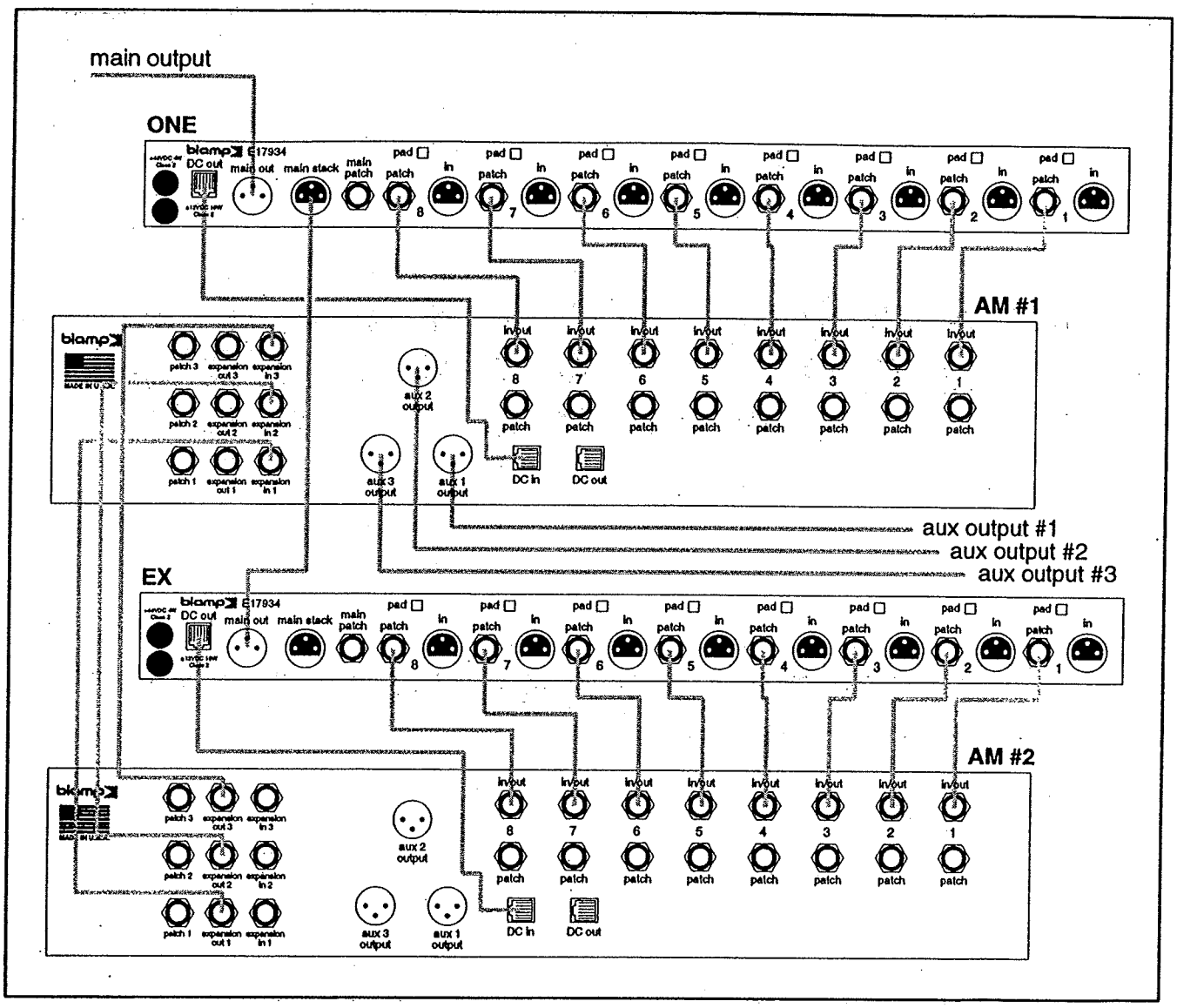

A) Connect Advantage EX Main Out jack to Advantage ONE Main Stack jack using balanced XLR cable.
B) Connect mic/line inputs to Channels 1~8 of Advantage ONE and Channels 1~8 of Advantage EX.
C) Adjust Advantage ONE/EX Trim controls so Peak Indicators (+10) are activated by occasional peaks in signal level.
D) Adjust Advantage ONE/EX Channel and Master Level controls for desired levels.
E) Connect Advantage ONE DC Out jack to Advantage AM (#1) DC In jack using Modular cable.
F) Connect Advantage EX DC Out jack to Advantage AM (#2) DC In jack using Modular cable.
G) Connect Advantage ONE/EX Patch jacks to Advantage AM (#1 & #2) In/Out jacks using balanced 1/4" Phone cables.
H) Connect Advantage AM (#2) Expansion Out jacks to Advantage AM (#1) Expansion In jacks using unbalanced 1/4" Phone cables.
I) Adjust Advantage AM (#1 & #2) Channel Aux Level controls and Advantage AM (#1) Master Aux Level controls for desired levels.
J) Other settings as needed (i.e...Advantage ONE Limiter and Notch Filters; Advantage ONE/EX Phantom Power; etc.).

NOTE: Under these circumstances, Advantage AM (#1) provides the main Aux Outputs for the system. The Advantage AM (#2) Aux Outputs and Master Aux Level controls are not used, because they provide signals only from those 8 channels. The Advantage AM (#1) Aux Outputs and Master Aux Level controls provide signals from the channels of both Advantage AM modules (#1 & #2).

8 Input Mixer with 6 Auxiliary Sends

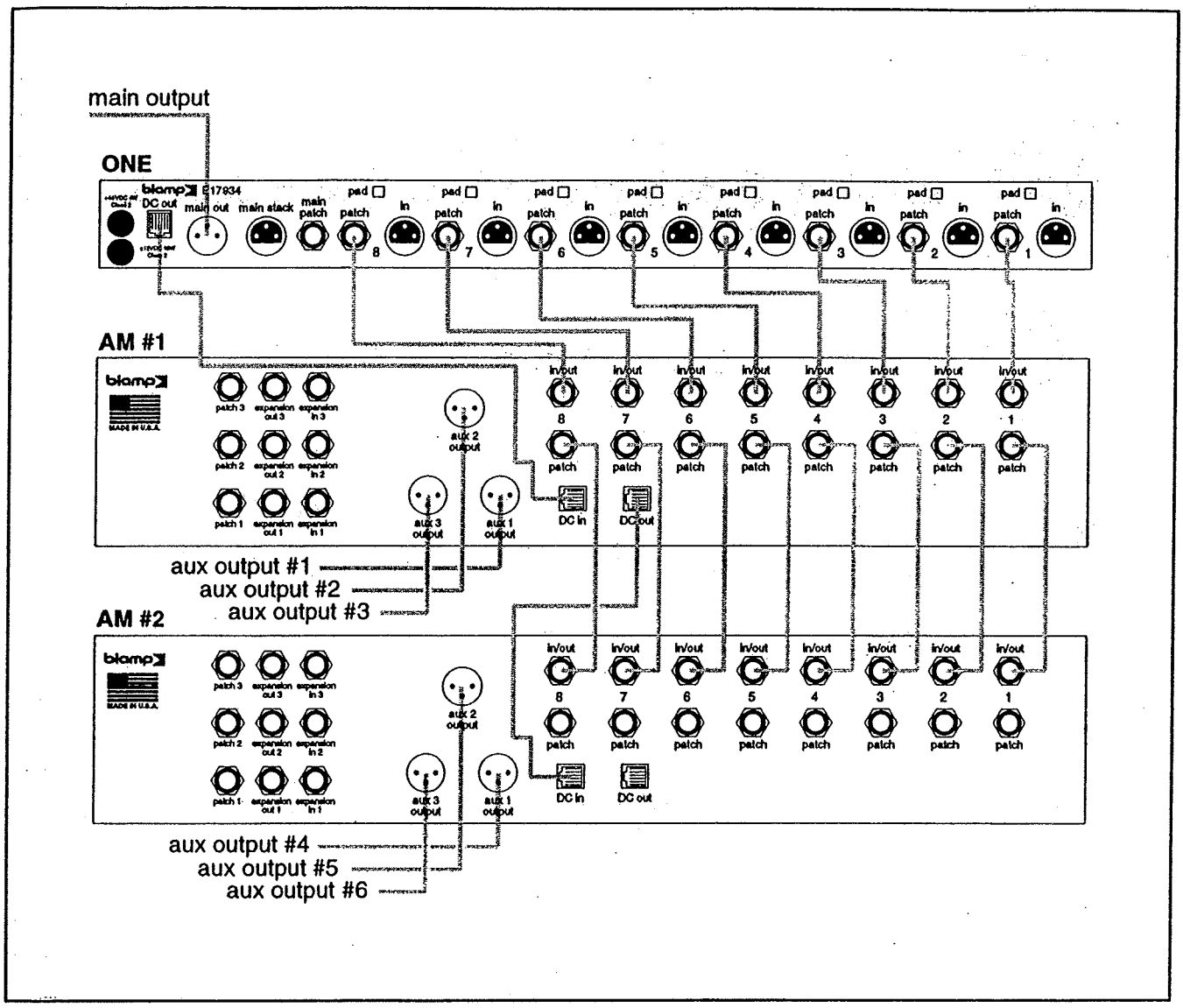

A) Connect mic/line inputs to Channels 1~8 of Advantage ONE.
B) Adjust Advantage ONE Trim controls so Peak Indicators (+10) are activated by occasional peaks in signal level.
C) Adjust Advantage ONE Channel and Master Level controls for desired levels.
D) Connect Advantage ONE DC Out jack to Advantage AM (#1) DC In jack using Modular cable.
E) Connect Advantage AM (#1) DC Out jack to Advantage AM (#2) DC In jack using Modular cable.
F) Connect Advantage ONE Patch jacks to Advantage AM (#1) In/Out jacks using balanced 1/4" Phone cables.
G) Connect Advantage AM (#1) Patch jacks to Advantage AM (#2) In/Out jacks using balanced 1/4" Phone cables.
H) Adjust Advantage AM (#1 & #2) Channel and Master Aux Level controls for desired levels.
I) Other settings as needed (i.e...Advantage ONE Limiter, Phantom Power, and Bass & Treble EQ; etc.).

8 Input Automatic Mixer with 3 Auxiliary Sends plus Remote Output Level Control

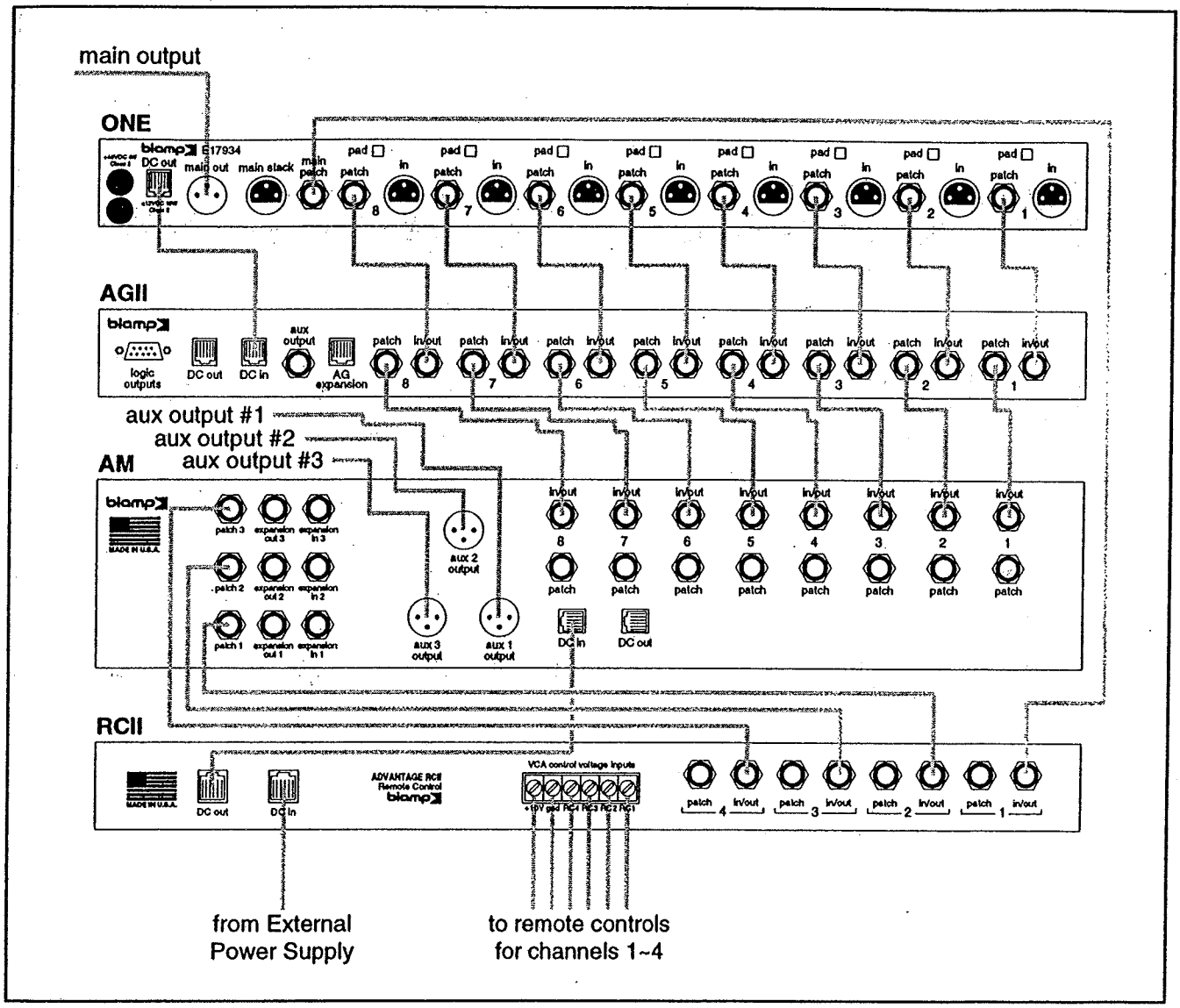

A) Connect microphones to Channels 1~8 of Advantage ONE.
B) Adjust Advantage ONE Trim controls so Peak Indicators (+10) are activated by occasional peaks in signal level.
C) Adjust Advantage ONE Channel and Master Level controls for desired levels.
D) Connect Advantage ONE DC Out jack to Advantage AGII DC In jack using Modular cable.
E) Connect External Power Supply to Advantage RCII DC In jack (see Accessories: External Power Supply on page 22).
F) Connect Advantage RCII DC Out jack to Advantage AM DC In jack using Modular cable.
G) Connect Advantage ONE Patch jacks to Advantage AGII In/Out jacks using balanced 1/4" Phone cables.
H) Connect Advantage AGII Patch jacks to Advantage AM In/Out jacks using balanced 1/4" Phone cables.
I) Adjust Advantage AGII Threshold control so channels are easily activated by normal input levels, but not by ambient noise.
J) Adjust Advantage AM Channel and Master Aux Level controls for desired levels.
K) Connect Advantage RCII In/Out jacks to Advantage ONE and Advantage AM Main Patch jacks using balanced 1/4" Phone cables.
L) Connect Remote Controls to Advantage RCII VCA Control Voltage Inputs (see Cables: Remote Control on page 20).
M) Other settings as needed (i.e...Advantage ONE Notch Filters, and EQ Bypass; Advantage RCII Remote Controls; etc.).

NOTE: Under these circumstances, the Auxiliary Sends will be "gated" signal. If "non-gated" auxiliary sends are desired, install the Advantage AM ahead of the Advantage AGII in the signal path.

Other Mixers with 3 Auxiliary Sends plus External Signal Processing

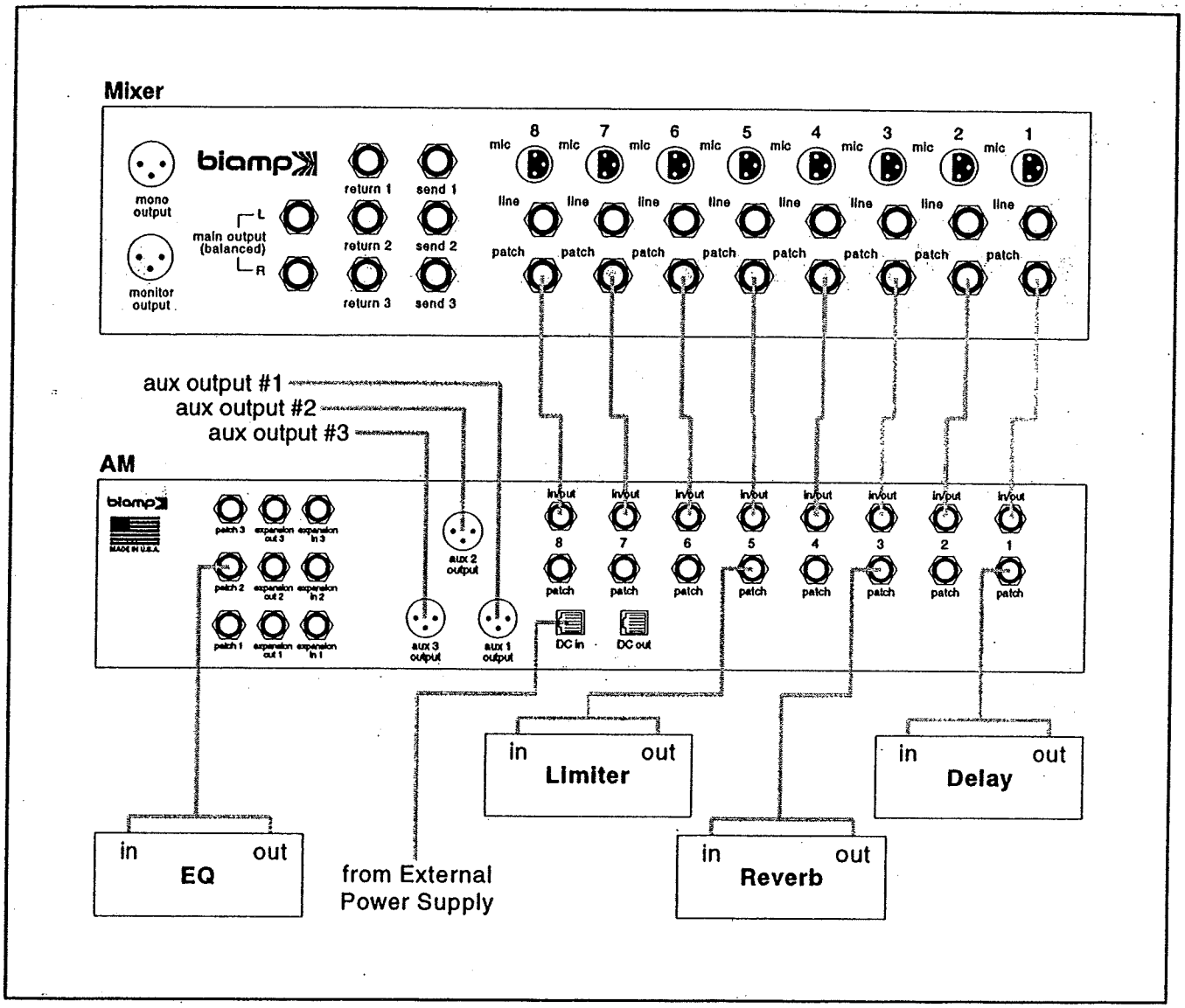

A) Connect External Power Supply to Advantage AM DC In jack (see Accessories: External Power Supply on page 22).
B) Connect mic/line inputs to mixer.
C) Adjust channel "Trim" controls of mixer for proper signal levels (signals should be of equal level at channel "Patch" jacks).
D) Connect "Patch" jacks of mixer to Advantage AM In/Out jacks (see Advantage AM: In/Out on page 15).
E) Adjust Advantage AM Channel and Master Aux Level controls for desired levels.
F) Connect Advantage AM Patch and Main Patch jacks to In & Out jacks of signal processing devices (see Cables: Patch on page 20).
G) Adjust parameters of signal processing devices (i.e...Input Level, Program, Mix/Blend, Output Level, etc.).
H) Adjust "Channel" and "Master" level controls of mixer for desired levels.

NOTE: Under these circumstances, any signal processing connected to Advantage AM Channel Patch jacks will not affect the auxiliary sends. If signal processing is desired on individual channel auxiliary sends, install it ahead of the Advantage AM in the signal path.

8 Input Automatic Mixer with 3-Band Channel Equalization

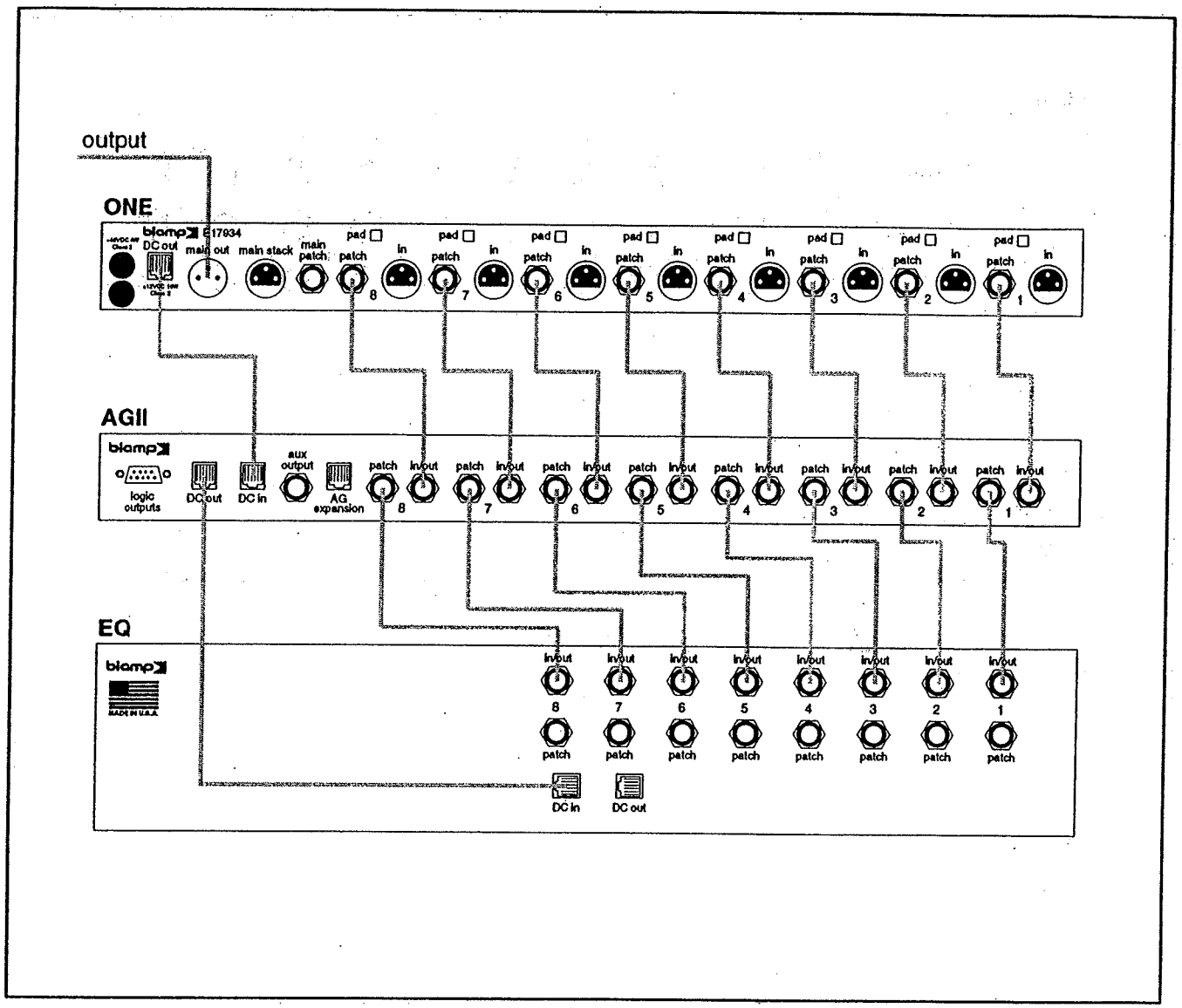

A) Connect microphones to Channels 1~8 of Advantage ONE.
B) Adjust Advantage ONE Trim controls so Peak Indicators (+10) are activated by occasional peaks in signal level.
C) Adjust Advantage ONE Channel and Master Level controls for desired levels.
D) Connect Advantage ONE DC Out jack to Advantage AGII DC In jack using Modular cable.
E) Connect Advantage AGII DC Out jack to Advantage EQ DC In jack using Modular cable.
F) Connect Advantage ONE Patch jacks to Advantage AGII In/Out jacks using balanced 1/4" Phone cables.
G) Connect Advantage AGII Patch jacks to Advantage EQ In/Out jacks using balanced 1/4" Phone cables.
H) Adjust Advantage AGII Threshold control so channels are easily activated by normal input levels, but not by ambient noise.
I) Adjust Advantage EQ Level controls for desired equalization.
J) Other settings as needed (i.e...Advantage ONE Rumble Filter and Notch Filters; Advantage AGII Release Time; etc.).

NOTE: When using Advantage AGII and Advantage EQ modules in the same system, always connect the Advantage AGII modules ahead of the Advantage EQ modules in the signal path. This will prevent Advantage EQ adjustments from interfering with proper adjustment of the Advantage AGII Threshold control.

16 Input Mixer with 3-Band Channel Equalization

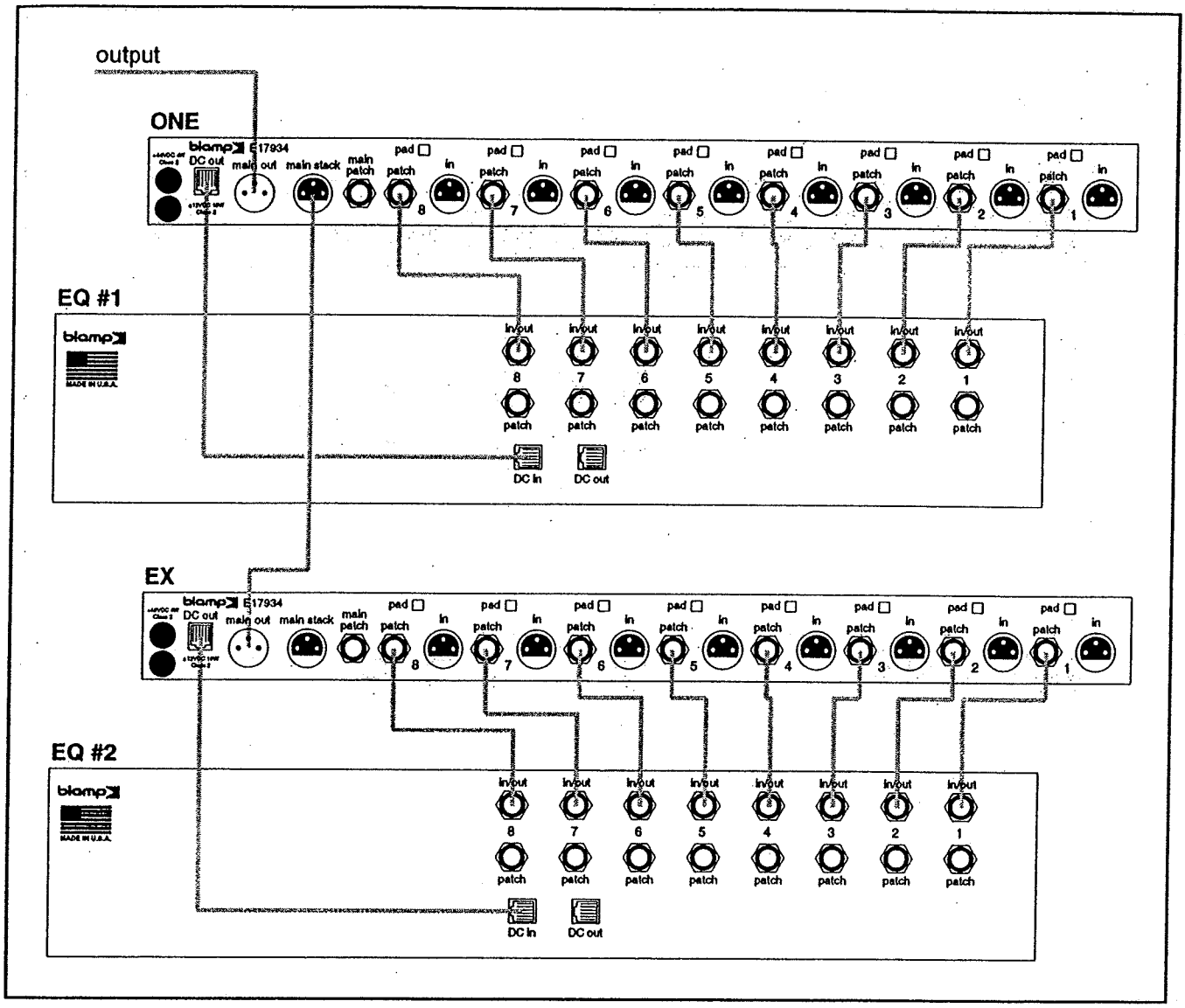

A) Connect Advantage EX Main Out jack to Advantage ONE Main Stack jack using balanced XLR cable.
B) Connect mic/line inputs to Channels 1~8 of Advantage ONE and Channels 1~8 of Advantage EX.
C) Adjust Advantage ONE/EX Trim controls so Peak Indicators (+10) are activated by occasional peaks in signal level.
D) Adjust Advantage ONE/EX Channel and Master Level controls for desired levels.
E) Connect Advantage ONE DC Out jack to Advantage EQ (#1) DC In jack using Modular cable.
F) Connect Advantage EX DC Out jack to Advantage EQ (#2) DC In jack using Modular cable.
G) Connect Advantage ONE/EX Patch jacks to Advantage EQ (#1 & #2) In/Out jacks using balanced 1/4" Phone cables.
H) Adjust Advantage EQ (#1 & #2) Level controls for desired equalization.
I) Other settings as needed (i.e...Advantage ONE Limiter and Bass & Treble EQ; Advantage ONE/EX Phantom Power; etc.).

8 Input Mixer with 3-Band Channel Equalization plus 3 Auxiliary Sends

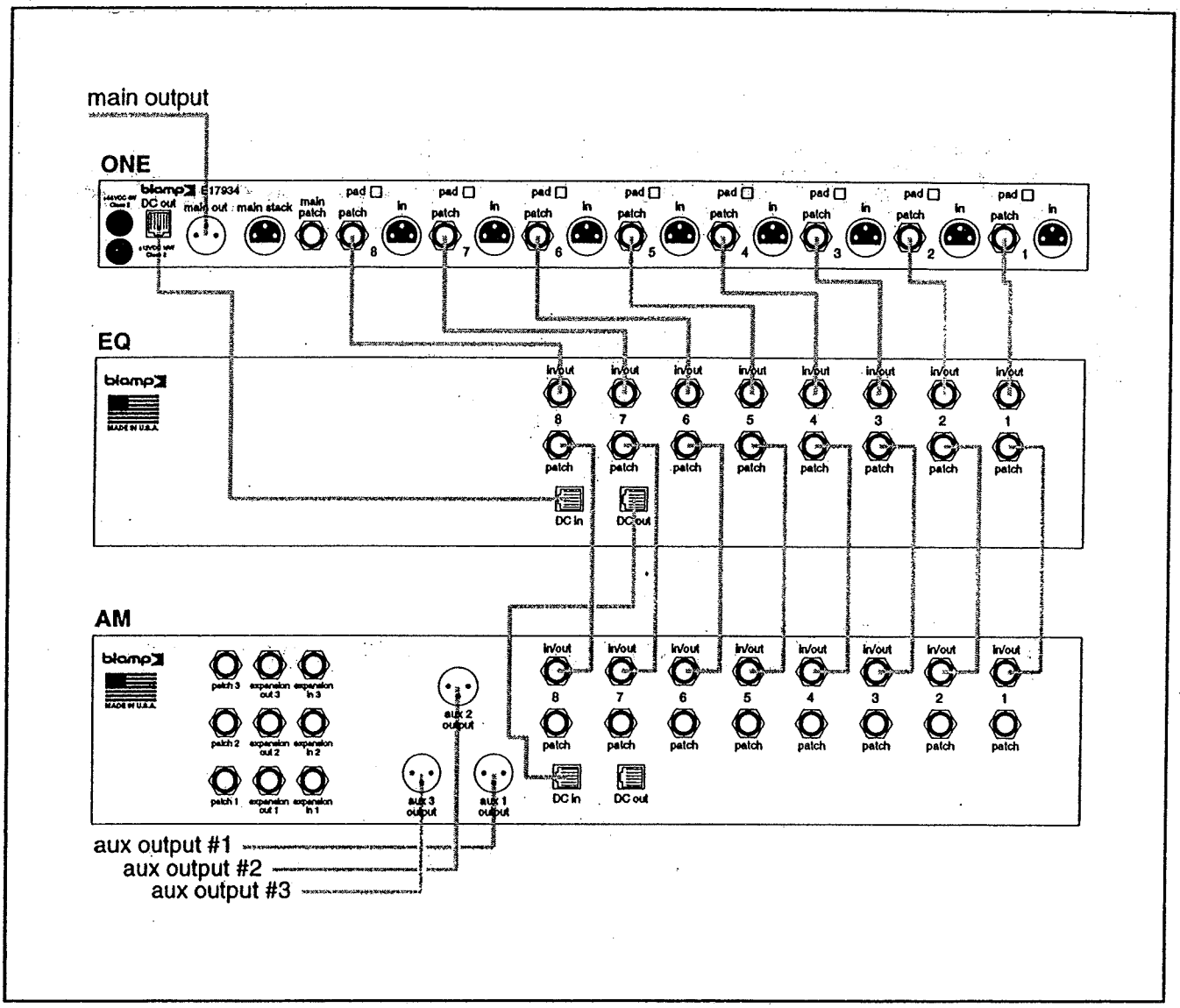

A) Connect mic/line inputs to Channels 1~8 of Advantage ONE.
B) Adjust Advantage ONE Trim controls so Peak Indicators (+10) are activated by occasional peaks in signal level.
C) Adjust Advantage ONE Channel and Master Level controls for desired levels.
D) Connect Advantage ONE DC Out jack to Advantage EQ DC In jack using Modular cable.
E) Connect Advantage EQ DC Out jack to Advantage AM DC In jack using Modular cable.
F) Connect Advantage ONE Patch jacks to Advantage EQ In/Out jacks using balanced 1/4" Phone cables.
G) Connect Advantage EQ Patch jacks to Advantage AM In/Out jacks using balanced 1/4" Phone cables.
H) Adjust Advantage EQ Level controls for desired equalization.
I) Adjust Advantage AM Channel and Master Aux Level controls for desired levels.
J) Other settings as needed (i.e...Advantage ONE Limiter, Phantom Power, and Bass & Treble EQ; etc.).

NOTE: Under these circumstances, the auxiliary sends will be "post-EQ". If "pre-EQ" auxiliary sends are desired, install the Advantage AM ahead of the Advantage EQ in the signal path.

8 Input Mixer with 6 Auxiliary Sends plus 3-Band Output Equalization

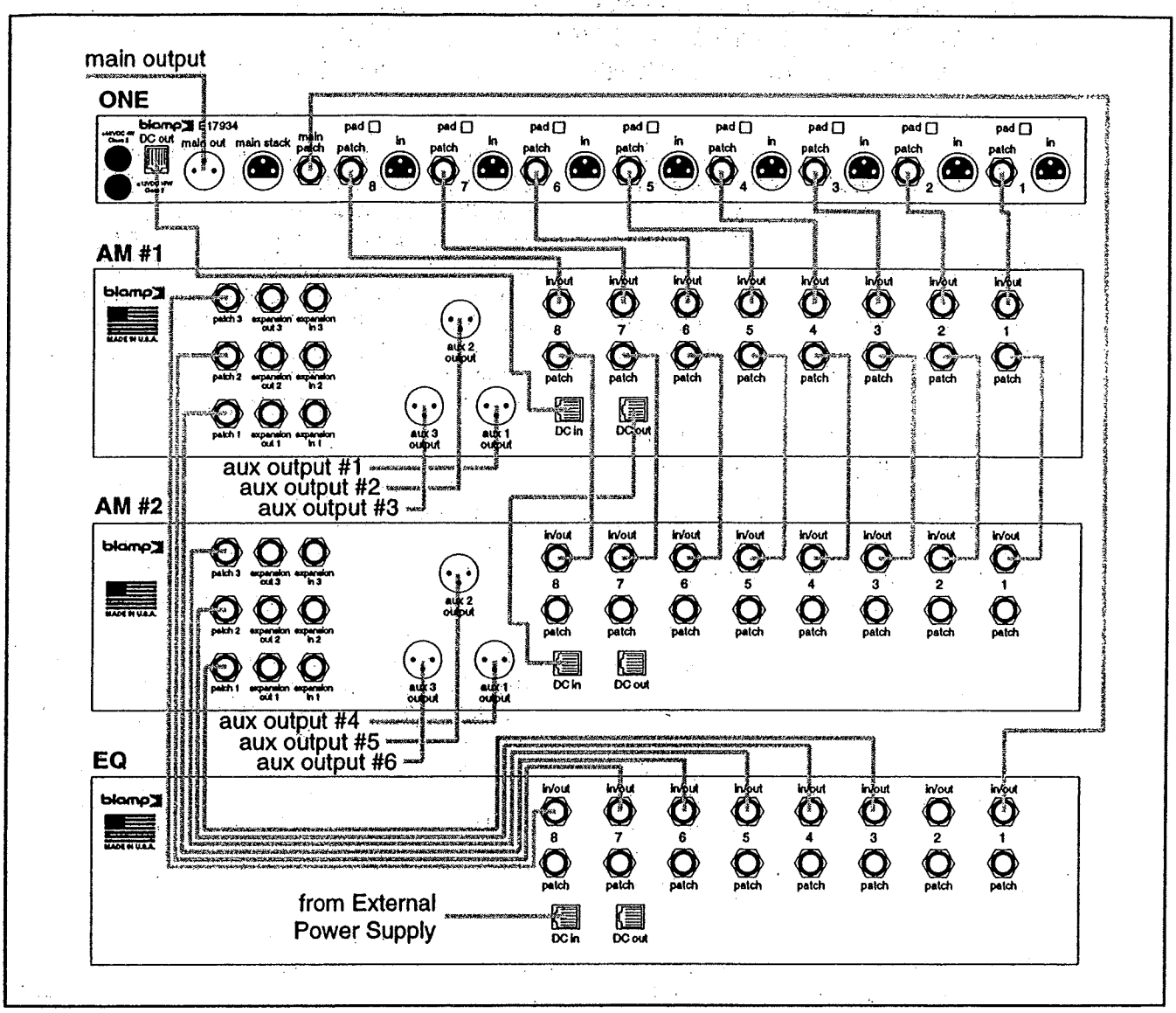

A) Connect mic/line inputs to Channels 1~8 of Advantage ONE.
B) Adjust Advantage ONE Trim controls so Peak Indicators (+10) are activated by occasional peaks in signal level.
C) Adjust Advantage ONE Channel and Master Level controls for desired levels.
D) Connect Advantage ONE DC Out jack to Advantage AM (#1) DC In jack using Modular cable.
E) Connect Advantage AM (#1) DC Out jack to Advantage AM (#2) DC In jack using Modular cable.
F) Connect Advantage ONE Patch jacks to Advantage AM (#1) In/Out jacks using balanced 1/4" Phone cables.
G) Connect Advantage AM (#1) Patch jacks to Advantage AM (#2) In/Out jacks using balanced 1/4" Phone cables.
H) Adjust Advantage AM (#1 & #2) Channel and Master Aux Level controls for desired levels.
I) Connect External Power Supply to Advantage EQ DC In jack (see Accessories: External Power Supply on page 22).
J) Connect Advantage ONE and AM (#1 & #2) Main Patch jacks to Advantage EQ In/Out jacks using balanced 1/4" Phone ccables.
K) Adjust Advantage EQ Level controls for desired output equalization.
L) Other settings as needed (i.e...Advantage ONE EQ Bypass, Limiter, and Phantom Power; etc.).

NOTE: Under these circumstances, equalization may be added to individual channels and/or outputs.

WARRANTY

BIAMP IS PLEASED TO EXTEND THE FOLLOWING 5-YEAR LIMITED WARRANTY TO THE ORIGINAL PURCHASER OF THE PROFESSIONAL SOUND EQUIPMENT DESCRIBED IN THIS OWNER'S MANUAL.

BIAMP Systems expressly warrants this product to be free from defects in material and workmanship for a period of 5 YEARS from the date of purchase as a new product from an authorized BIAMP dealer under the following conditions.

1. The Purchaser is responsible for completing and mailing to BIAMP, within 10 days of purchase, the attached warranty application.

2. In the event the warranted BIAMP product requires service during the warranty period, BIAMP will repair or replace, at its option, defective materials, provided you have identified yourself as the original purchaser of the product to any authorized BIAMP Service Center. Transportation and insurance charges to and from an authorized Service Center or the BIAMP factory for warranted products or components thereof to obtain repairs shall be the responsibility of the purchaser.

3. This warranty will be VOIDED if the serial number has been removed or defaced; or if the product has been subjected to accidental damage, abuse, rental usage, alterations, or attempted repair by any person not authorized by BIAMP to make repairs; or if the product has been installed contrary to BIAMP's recommendations.

4. Electro-mechanical fans, electrolytic capacitors, and the normal wear and tear of appearance items such as paint, knobs, handles, and covers are not covered under this warranty.

5. BIAMP SHALL NOT IN ANY EVENT BE LIABLE FOR SPECIAL, INCIDENTAL, OR CONSEQUENTIAL DAMAGES, INCLUDING LOST PROFITS, LOSS OF USE, PROPERTY DAMAGE, INJURY TO GOODWILL, OR OTHER ECONOMIC LOSS OF ANY SORT. EXCEPT AS EXPRESSLY PROVIDED HEREIN, BIAMP DISCLAIMS ALL OTHER LIABILITY TO PURCHASER OR ANY OTHER PERSONS ARISING OUT OF USE OR PERFORMANCE OF THE PRODUCT, INCLUDING LIABILITY FOR NEGLIGENCE OR STRICT LIABILITY IN TORT.

6. THIS WARRANTY IS IN LIEU OF ALL OTHER WARRANTIES EXPRESSED OR IMPLIED. BIAMP EXPRESSLY DISCLAIMS ALL IMPLIED WARRANTIES OF MERCHANTABILITY AND FITNESS FOR A PARTICULAR PURPOSE. THE REMEDIES SET FORTH HEREIN SHALL BE THE PURCHASER'S SOLE AND EXCLUSIVE REMEDIES WITH RESPECT TO ANY DEFECTIVE PRODUCT. THE AGENTS, EMPLOYEES, DISTRIBUTORS, AND DEALERS OF BIAMP ARE NOT AUTHORIZED TO MODIFY THIS WARRANTY OR TO MAKE ADDITIONAL WARRANTIES BINDING ON BIAMP. ACCORDINGLY, ADDITIONAL STATEMENTS SUCH AS DEALER ADVERTISEMENTS OR REPRESENTATIONS DO NOT CONSTITUTE WARRANTIES BY BIAMP.

7. No action for breach of this warranty may be commenced more than one year after the expiration of this warranty.

Thank you for purchasing BIAMP...
AMERICAN SOUND CRAFTSMANSHIP

Biamp Systems
10074 S.W. Arctic Drive
Beaverton, Oregon 97005
(503)-641-7287
http://www.biamp.com

585.0051.00

CE Marking and FCC Regulations

The distinctive "CE" letters marking is used within the European Union as an indication that products conform to relevant legal requirements, known as European Directives.

The directive addressing electromagnetic compatibility (EMC) is EMC Directive 89/336/EEC effective the 1st of January 1996. The EMC Directive requires that the product not generate electromagnetic interference (emissions) that would be likely to cause other electrical or electronic apparatus to malfunction, and the product not be unduly affected by electromagnetic interference (immunity) from other apparatus. Effective January 1, 1997 the CE mark applies to compliance with the Low Voltage Directive (LVD) 73/23/EEC. The LVD intent is to assure a product, used properly, does not endanger the safety of persons, domestic animals, or property.

Regulations covering interference generated by radio frequency devices, including digital devices, have existed for several years in the United States. The FCC Telecommunications regulations (Part 15) specifically addresses product emissions. Currently, immunity is not covered by these rules.

This product has been tested to recognized standards for compliance with the Directive. The exact standards used are listed in the Declaration of Conformity. Different types of products may use different standards.

NOTE: This equipment has been tested and found to comply with the limits for a Class B digital device, pursuant to part 15 of the FCC Rules. These limits are designed to provide reasonable protection against harmful interference in a residential installation.

Please note that the EMC Directive requires only what is referred to as an "adequate" level of immunity. It does not mean that the product will be totally unaffected in all possible situations. The standards used in testing require us to explain any abnormal performance that may be observed when the product is subjected to interference.

NOTE: *Modifications to the product not approved by the manufacturer, improper installation or installation in areas not intended for its use could affect the compliance of this product and void the user's authority to operate the product.*

Emissions

This device complies with Part 15 of the FCC Rules. Operation is subject to the following two conditions: (1) This device may not cause harmful interference, and (2) this device must accept any interference received, including interference that may cause undesired operation.

In practice most analog audio equipment is incapable of generating harmful interference unless it is misused or a fault exists. Audio products containing microprocessors or other digital circuitry often operate in the radio frequency range and may emit some of this energy into the environment.

The product has been tested for compliance with applicable established standards for emissions (radiated and conducted). These standards consider specific emission levels and distances for usage in "normal" environments for the intended product application.

NOTE: *This equipment generates, uses and can radiate radio frequency energy and, if not installed and used in accordance with the instructions, may cause harmful interference to radio communications. However, there is no guarantee that interference will not occur in a particular installation.*

If the product is found to cause interference with another apparatus applying one, or more, of the actions noted in the Guidelines to Minimize Interference may correct the situation.

Immunity

Immunity is the ability to maintain a specified level of performance when subjected to specific interference signals. If the product is operated in environments with unusually high levels of emissions from other apparatus, its performance may be degraded. Due to the large number of variables possible in the usage of this product, and its controls' settings, it is impossible to define the exact degradation that may occur in every possible situation.

Susceptibility to "fast transients" (EFT) on the AC power and signal connections and to "electrostatic discharge" (ESD) may result in momentary noises from the product such as beeps, chirps, clicks or pops and may disrupt digital communications between this product and connected accessory products. Operation will otherwise remain unaffected. Upon removal of the interference, the product will resume normal operation. Digital communications will be re-established with the next transmission after the interference is removed. Since these events are usually infrequently encountered, the results should not give cause for concern.

Susceptibility to radio frequency fields (3V/m) varies with product type and specific radio frequency. No audible degradation was observed for this product under the test guidelines. Degradation of the audio performance may occur at specific spot frequencies, so unless the product happens to be located near an apparatus transmitting at exactly that frequency, no degradation will occur. If affected, following one, or more, of the Guidelines to Minimize Interference may reduce the interference.

Guidelines to Minimize Interference

When used as intended, the product is unlikely to encounter any problems in normal everyday use. If you do encounter interference from, or in, other apparatus the following suggestions may eliminate the problem.

It is important that high quality screened (shielded) cables are used for all signal connections. Note that low cost screened cables may have inadequate screening which does not fully cover the internal conductors.

Minimize cable lengths when interconnecting equipment. Excessive cable length increases an antenna effect.

Use balanced connections wherever possible, especially if equipment is located in different racks or locations.

Do not place sensitive equipment directly next to units with large power transformers, such as amplifiers, or near digital devices. Computers, monitors and associated peripherals may cause interference, especially older devices. Locate video monitors a prudent distance from any sensitive equipment.

Products designed for earth grounding must be connected to earth ground. Verify the quality of the earth ground connection, especially when encountering interference effects.

Turn apparatus off and on one at a time to isolate the radiating, or susceptible, device(s).

Re-orient or relocate interacting devices. RF signals are very directional and decrease in strength with distance.

On products equipped with a receiving antenna, re-orient or relocate it to avoid the interaction.

Connect apparatus to a different AC mains power circuit.

Consult the dealer or a radio frequency experienced technician.

Fit a partial or complete RF screening (known as a Faraday cage) around the product, or the room where the product is used.

Typical AC mains transients may be caused by defective components in products being switched on and off frequently. Products with thermostats, such as heating and cooling devices and refrigerators, often can generate transients due to a faulty or worn thermostatic switch. Additionally power mains transients may be generated by apparatus that are external of your facility, such as faulty main feeder wiring or street lighting. In such cases you will need to contact your electrical supply authority to resolve the interference, or you may wish to directly add powerline filtering which can be obtained from local electrical retailers.

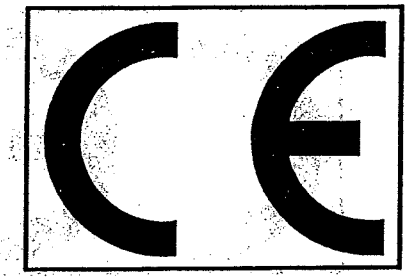

Declaration of Conformity

BIAMP SYSTEMS
10074 SW Arctic Drive
Beaverton, OR USA 97005

as the manufacturer, hereby declares that the following described product, in our delivered version, complies with the provisions of the DIRECTIVES as noted herein. In case of alteration of the product, not agreed upon or directed by us, this declaration is no longer valid.

Product: Model: ADVANTAGE® ONE
Description: Audio Preamplifier-Mixer

Applicable EC Directives: EMC Directive (89/336/EEC) LVD Directive (73/23/EEC)

Applicable Harmonized Standards: EN55013 emissions EN55020 immunity
EN60065 safety

Special Considerations for Product Environment or Compliance: This apparatus operates from a removeable external power source at voltages below the levels encompassed by the LVD. The external power source complies with the applicable requirements of EN60065. The apparatus itself is outside of the scope of the LVD and presents no hazardous voltages, as defined in the LVD. For compliance, the apparatus shall be powered only from the separate CE marked BIAMP SYSTEMS power source.

The Technical Report/File is maintained at:

Biamp Systems
10074 S.W. Arctic Drive
Beaverton, OR USA 97005
phone: (503) 641-7287 fax: (503) 626-0281
e-mail: biamp@biamp.com

Authorized Representative: Ralph Lockhart, President

Authorized Representative Signature:

Issued: 1998

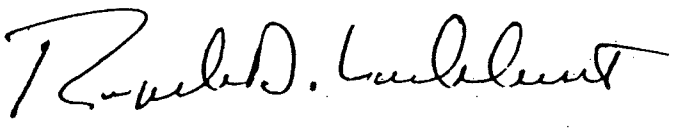

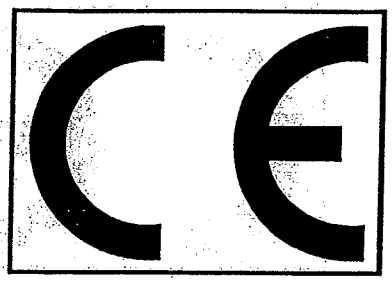

Declaration of Conformity

BIAMP SYSTEMS
10074 SW Arctic Drive
Beaverton, OR USA 97005

as the manufacturer, hereby declares that the following described product, in our delivered version, complies with the provisions of the DIRECTIVES as noted herein. In case of alteration of the product, not agreed upon or directed by us, this declaration is no longer valid.

Product: Model: ADVANTAGE® EX
Description: Audio Preamplifier-Mixer Expander

Applicable EC Directives: EMC Directive (89/336/EEC) LVD Directive (73/23/EEC)

Applicable Harmonized Standards: EN55013 emissions EN55020 immunity
EN60065 safety

Special Considerations for Product Environment or Compliance: This apparatus operates from an external power source at voltages below the levels encompassed by the LVD. Any external power source used must comply with the applicable requirements of EN60065. The apparatus itself is outside of the scope of the LVD and presents no hazardous voltages, as defined in the LVD. For compliance, the apparatus shall be powered only from a separate CE marked BIAMP SYSTEMS power source or apparatus suitable for supplying appropriate operating voltages.

The Technical Report/File is maintained at:

Biamp Systems
10074 SW Arctic Drive
Beaverton, OR USA 97005
phone: (503) 641-7287 fax: (503) 626-0281
e-mail: biamp@biamp.com

Authorized Representative: Ralph Lockhart, President

Authorized Representative Signature:

Issued: 1998

Ralph D. Lockhart

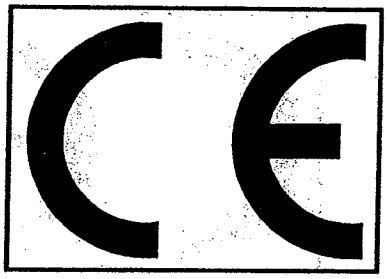

Declaration of Conformity

BIAMP SYSTEMS
10074 SW Arctic Drive
Beaverton, OR USA 97005

as the manufacturer, hereby declares that the following described product, in our delivered version, complies with the provisions of the DIRECTIVES as noted herein. In case of alteration of the product, not agreed upon or directed by us, this declaration is no longer valid.

Product: Model: ADVANTAGE® AGII
Description: Audio Automatic Gate

Applicable EC Directives: EMC Directive (89/336/EEC) LVD Directive (73/23/EEC)

Applicable Harmonized Standards: EN55013 emissions EN55020 immunity
EN60065 safety

Special Considerations for Product Environment or Compliance: This apparatus operates from an external power source at voltages below the levels encompassed by the LVD. Any external power source used must comply with the applicable requirements of EN60065. The apparatus itself is outside of the scope of the LVD and presents no hazardous voltages, as defined in the LVD. For compliance, the apparatus shall be powered only from a separate CE marked BIAMP SYSTEMS power source or apparatus suitable for supplying appropriate operating voltages.

The Technical Report/File is maintained at:

Biamp Systems
10074 SW Arctic Drive
Beaverton, OR USA 97005
phone: (503) 641-7287 fax: (503) 626-0281
e-mail: biamp@biamp.com

Authorized Representative: Ralph Lockhart, President

Authorized Representative Signature:

Issued: 1998

Ralph D. Lockhart

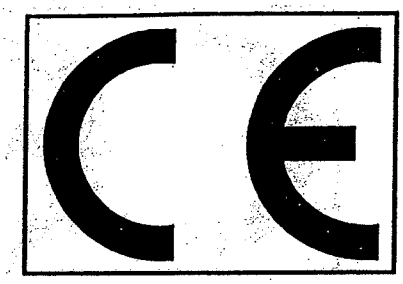

Declaration of Conformity

BIAMP SYSTEMS
10074 SW Arctic Park Drive
Beaverton, OR USA 97005

as the manufacturer, hereby declares that the following described product, in our delivered version, complies with the provisions of the DIRECTIVES as noted herein. In case of alteration of the product, not agreed upon or directed by us, this declaration is no longer valid.

Product: Model: ADVANTAGE® RCII
Description: Audio VCA Remote Control

Applicable EC Directives: EMC Directive (89/336/EEC) LVD Directive (73/23/EEC)

Applicable Harmonized Standards: EN55013 emissions EN55020 immunity
EN60065 safety

Special Considerations for Product Environment or Compliance: This apparatus operates from an external power source at voltages below the levels encompassed by the LVD. Any external power source used must comply with the applicable requirements of EN60065. The apparatus itself is outside of the scope of the LVD and presents no hazardous voltages, as defined in the LVD. For compliance, the apparatus shall be powered only from a separate CE marked BIAMP SYSTEMS power source or apparatus suitable for supplying appropriate operating voltages.

The Technical Report/File is maintained at:

Biamp Systems
10074 SW Arctic Drive
Beaverton, OR USA 97005
phone: (503) 641-7287 fax: (503) 626-0281
e-mail: biamp@biamp.com

Authorized Representative: Ralph Lockhart, President

Authorized Representative Signature:

Issued: 1998

Ralph D. Lockhart

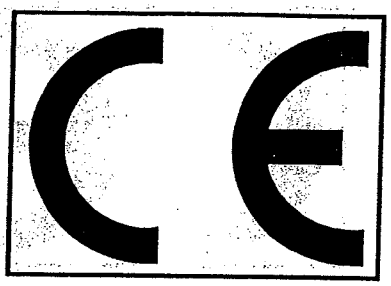

Declaration of Conformity

BIAMP SYSTEMS
10074 SW Arctic Drive
Beaverton, OR USA 97005

as the manufacturer, hereby declares that the following described product, in our delivered version, complies with the provisions of the DIRECTIVES as noted herein. In case of alteration of the product, not agreed upon or directed by us, this declaration is no longer valid.

Product: Model: ADVANTAGE® AM
Description: Audio Auxiliary Mixer

Applicable EC Directives: EMC Directive (89/336/EEC) LVD Directive (73/23/EEC)

Applicable Harmonized Standards: EN55013 emissions EN55020 immunity
EN60065 safety

Special Considerations for Product Environment or Compliance: This apparatus operates from an external power source at voltages below the levels encompassed by the LVD. Any external power source used must comply with the applicable requirements of EN60065. The apparatus itself is outside of the scope of the LVD and presents no hazardous voltages, as defined in the LVD. For compliance, the apparatus shall be powered only from a separate CE marked BIAMP SYSTEMS power source or apparatus suitable for supplying appropriate operating voltages.

The Technical Report/File is maintained at:

Biamp Systems
10074 SW Arctic Drive
Beaverton, OR USA 97005
phone: (503) 641-7287 fax: (503) 626-0281
e-mail: biamp@biamp.com

Authorized Representative: Ralph Lockhart, President

Authorized Representative Signature:

Issued: 1998

Ronald D. Lockhart

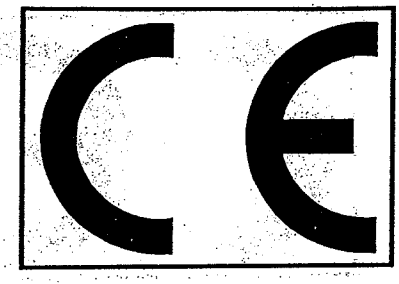

Declaration of Conformity

BIAMP SYSTEMS
10074 SW Arctic Drive
Beaverton, OR USA 97005

as the manufacturer, hereby declares that the following described product, in our delivered version, complies with the provisions of the DIRECTIVES as noted herein. In case of alteration of the product, not agreed upon or directed by us, this declaration is no longer valid.

Product: Model: ADVANTAGE® EQ
Description: Audio Equalizer

Applicable EC Directives: EMC Directive (89/336/EEC) LVD Directive (73/23/EEC)

Applicable Harmonized Standards: EN55013 emissions EN55020 immunity
EN60065 safety

Special Considerations for Product Environment or Compliance: This apparatus operates from an external power source at voltages below the levels encompassed by the LVD. Any external power source used must comply with the applicable requirements of EN60065. The apparatus itself is outside of the scope of the LVD and presents no hazardous voltages, as defined in the LVD. For compliance, the apparatus shall be powered only from a separate CE marked BIAMP SYSTEMS power source or apparatus suitable for supplying appropriate operating voltages.

The Technical Report/File is maintained at:

Biamp Systems
10074 SW Arctic Drive
Beaverton, OR USA 97005
phone: (503) 641-7287 fax: (503) 626-0281
e-mail: biamp@biamp.com

Authorized Representative: Ralph Lockhart, President

Authorized Representative Signature:

Issued: 1998

Ronald D. Lockhart

SAFETY INFORMATION

The words WARNING and CAUTION throughout the manual, and on the device, call attention to important safety information. These words have the following meanings.

WARNING: The related information alerts you to conditions that could result in serious injury or damage to property if the instructions are not followed properly.

CAUTION: The related information instructs you on how to prevent damage to the equipment or how to avoid conditions that could result in minor injury if proper steps are not followed.

Product labelling and the operation manual may use the internationally recognized symbols defined below to note safety messages.

The lightning flash with arrowhead symbol, enclosed within a triangle, is intended to alert the user to the presence of uninsulated "dangerous voltage" within the apparatus's enclosure or at connection terminals that may be of sufficient magnitude to constitute a risk of electrical shock.

The exclamation point, enclosed within a triangle, is intended to alert the user to important installation, operation, and maintenance (servicing) instructions in the literature accompanying the apparatus.

WARNING: TO REDUCE THE RISK OF FIRE OR ELECTRICAL SHOCK, DO NOT EXPOSE THIS APPARATUS TO RAIN OR MOISTURE.

CAUTION: Installation of this apparatus should be made by a qualified installation person and should conform to all applicable local codes.

Modification and optional equipment information referenced in this manual is for use by qualified installation and service personnel only.

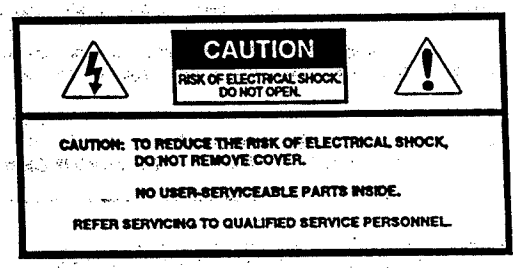

"INFORMACIÓN DE SEGURIDAD"

Las palabras **PELIGRO** (WARNING) y **PRECAUCIÓN** (CAUTION) a lo largo del manual y en el dispositivo (sistema), llaman la atención acerca de una importante información de seguridad. Estas palabras tienen los siguientes significados :

PELIGRO (WARNING) : la información relata las condiciones en que podría ser dañada seriamente la propiedad si no se siguen adecuadamente las instrucciones.

PRECAUCIÓN (CAUTION) : la información que se relata te instruye en cómo prevenir daños al equipo o como evitar condiciones que podrían resultar en perjuicio menor si los pasos adecuados no son seguidos correctamente.

El etiquetado del producto y el manual de operación pueden hacer uso de los símbolos reconocidos internacionalmente y cuyos mensajes estan definidos a continuación para modificar mensajes de seguridad:

El símbolo del rayo encerrado en un triángulo pretende alertar al usuario de la presencia de un peligroso voltaje no aislado ,dentro de la caja del aparato o a un terminal de conexión y que podría ser de suficiente magnitud como para constituir un grave riesgo de descarga eléctrica.

El punto de exclamación dentro de un triángulo pretende alertar al usuario de la importancia de las instrucciones de instalación, operación y mantenimiento (servicio) que acompañan al aparato.

PELIGRO (WARNING) : para reducir el riesgo de fuego o una descarga electrica, no exponer este aparato a la lluvia o la humedad.

PRECAUCIÓN (CAUTION) : la instalación de este aparato debería hacerse por una persona cualificada en la instalación, y debería conformar todos los códigos locales aplicables.

La modificación y la información opcional del equipo referenciada en este manual es para ser utilizada únicamente por personal cualificado en instalación y servicio.

SIKKERHETS INFORMASJON

Når ordene **ADVARSEL** (WARNING) og **VIKTIG** (CAUTION) blir brukt i manualen og på produktet, gjelder det informasjon som har med brukerens sikkerhet å gjøre. Ordene har følgende mening:

ADVARSEL: (WARNING) Tilhørende informasjon viser til forhold som kan resultere i alvorlige skader eller ødeleggelser hvis anvisningene ikke følges nøye.

VIKTIG: (CAUTION) Tilhørende informasjon forteller deg hvordan du skal unngå feil på utstyret, eller unngå situasjoner som kan resultere i mindre skader.

Produkt merkingen og bruksanvisningen bruker internasjonale symboler for å merke punkter som er viktige for brukerens sikkerhet.

Lynet i en triangel advarer brukeren om uisolert "farlig spenning" inne i apparatet, eller tilkoblings terminaler som kan gi støt.

Etter utropstegnet i en triangel følger informasjon som er viktig når det gjelder installasjon, bruk og vedlikehold (service) av apparatet.

ADVARSEL: (WARNING) FOR Å REDUSERE FAREN FOR BRANN ELLER STØT MÅ APPARATET IKKE UTSETTES FOR VANN ELLER FUKTIGHET.

VIKTIG: (CAUTION) Installasjon av apparatet skal foretas av autorisert installatør etter gjeldende forskrifter.

Modifikasjoner og tilleggs informasjon som følger er kun for kvalifiserte installatører eller service personell.

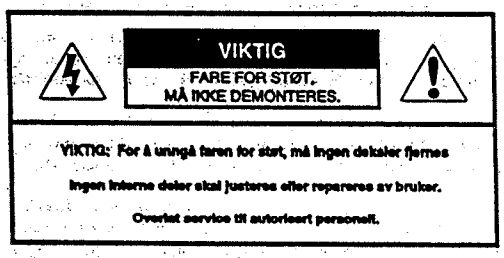

SÄKERHETS INFORMATION

Orden **VARNING** (WARNING) och **OBSERVERA** (CAUTION) vilka används i denna manual och på apparaten, är menade att uppmärksamma viktig säkerhets information. Dessa ord har följande betydelse.

VARNING: (WARNING) Information som uppmärksammar på omständigheter som kan resultera i allvarlig personskada eller skada på egendom om instruktionerna ej följs.

OBSERVERA: (CAUTION) Information som uppmärksammar på instruktioner om hur skada på utrustning eller hur situationer där lättare personskador kan uppstå undvikes.

Följande internationellt använda ord och symboler används i handboken och på märkningar på produkten för att uppmärksamma användare på viktiga säkerhets instruktioner.

En blixt med pil, innesluten i en triangel, menad att uppmärksamma användare på närvaron av oisolerade "farliga spänningar" i apparaten eller på anslutnings kontakter vilka har tillräcklig styrka för att medföra risk för elektrisk stöt.

Ett utropstecken, innesluten i en triangel, menad att uppmärksamma användare på viktiga installations, handhavande eller underhålls-instruktioner i medföljande dokumentation.

VARNING: (WARNING) FÖR ATT MINSKA RISKEN FÖR BRAND ELLER ELEKTRISK STÖT, UTSÄTT EJ APPARATEN FÖR FUKT ELLER VÄTSKA.

OBSERVERA: (CAUTION) Installation av denna apparat skall utföras av kvalificerad installatör samt enligt alla gällande lokala bestämmelser.

Eventuella modifierings instruktioner och annan information av teknisk art i denna manual är endast avsedd att användas av kvalificierad installations och service personal.

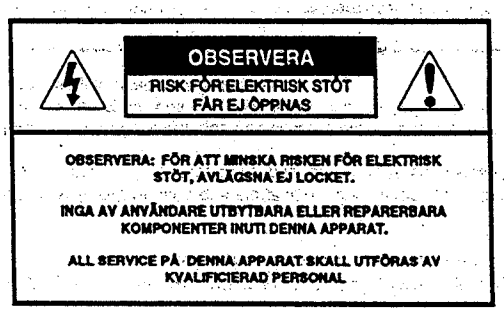

ΠΛΗΡΟΦΟΡΙΕΣ ΑΣΦΑΛΕΙΑΣ

Οι λέξεις **ΚΙΝΔΥΝΟΣ** (WARNING) και **ΠΡΟΣΟΧΗ** (CAUTION) που αναφέρονται μέσα στο εγχειρίδιο και στη συσκευή, επικεντρώνουν την προσοχή σε σημαντικές πληροφορίες ασφαλείας.
Οι λέξεις αυτές έχουν την παρακάτω σημασία.

ΚΙΝΔΥΝΟΣ : (WARNING) Η αναγραφόμενη πληροφορία επιστά την προσοχή σας σε καταστάσεις που θα μπορούσαν να έχουν σαν αποτέλεσμα σοβαρό τραυματισμό ή καταστροφή της ιδιοκτησίας αν οι οδηγίες δεν ακολουθηθούν κατάλληλα.

ΠΡΟΣΟΧΗ : (CAUTION) Η αναγραφόμενη πληροφορία σας καθοδηγεί πώς να προλάβετε καταστροφή του εξοπλισμού ή πώς να αποφύγετε καταστάσεις που θα μπορούσαν να έχουν ως αποτέλεσμα μικροτραυματισμούς αν δεν ακολουθηθούν τα σωστά βήματα.

Στις επιγραφές των προϊόντων και στο εγχειρίδιο λειτουργίας, χρησιμοποιούνται τα διεθνώς αναγνωρισμένα σύμβολα, των οποίων ο ορισμός δίνεται παρακάτω έτσι ώστε να υπογραμμιστούν τα μηνύματα ασφαλείας.

Η φαιτεινή αναλαμπή με σύμβολο το βέλος, μέσα στο τρίγωνο, έχει σκοπό να επιστήσει την προσοχή του χρήστη, στην ύπαρξη μη- μονωμένης « επικίνδυνης ισχύος ρεύματος » στο εσωτερικό της συσκευής ή στις άκρες σύνδεσης οι οποίες μπορεί να έχουν αρκετό μέγεθος ώστε να περιέχουν κίνδυνο ηλεκτροπληξίας.

Το επεξηγηματικό σημείο, μέσα στο τρίγωνο, έχει σκοπό να επιστήσει την προσοχή του χρήστη στις σημαντικές οδηγίες εγκατάστασης, λειτουργιας και συντήρησης (service) που περιέχονται στα φυλλάδια που συνοδεύουν την συακευή.

ΚΙΝΔΥΝΟΣ : (WARNING) Για να αποφύγετε τον κίνδυνο φωτιάς ή ηλεκτροπληξίας, μην εκθέτετε αυτή τη αυσκευή σε βροχή ή σε υγρασία.

ΠΡΟΣΟΧΗ : (CAUTION) Η εγκατάσταση αυτής της συσκευής θα πρέπει να γίνει από εξειδικευμένο άτομο και θα πρέπει να προσαρμόζεται σε όλους τους εφαρμόσιμους τοπικούς κώδικες.

Οι τροποποιήσεις και οι προϋποθετικές πληροφορίες για τον εξοπλισμό, που αναφέρονται σε αυτό το εγχειρίδιο, προορίζονται για χρήση μόνο από εξειδικευμένα στην εγκατάσταση και στο service, άτομα.

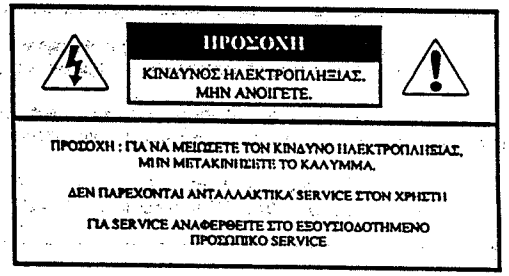

INFORMAÇÃO SOBRE SEGURANÇA

As palavras ADVERTÊNCIA (WARNING) e PRECAUÇÃO (CAUTION) neste manual, e no dispositivo, alertam para importantes informações sobre segurança. Estas palavras significam o seguinte:

ADVERTÊNCIA : (WARNING) Informação relacionada que alerta sobre condições que poderão resultar em lesões sérias ou prejuízo, se as instruções não forem seguidas adequadamente.

PRECAUÇÃO : (CAUTION) Informação relacionada que instrúi como prevenir danos no equipamento ou como evitar condições que poderão resultar em lesões leves, se os passos não forem seguidos adequadamente.

As etiquetas do produto e do manual de operações podem usar os símbolos internacionalmente reconhecidos definidos abaixo para advertir mensagens de segurança.

símbolo do relâmpago com uma seta, dentro de um triângulo, tem o fim de alertar o usuário a presença de "voltagem perigosa" sem isolação dentro da caixa Isolamento do aparelho ou nos terminais de ligação que podem ter a magnitude suficiente que constitui um risco de choque eléctrico.

ponto de exclamação, dentro de um triângulo, tem o fim de alertar o usuário sobre instruções importantes de instalação, operação e manutenção (serviços) na literatura que acompanha o aparelho.

ADVERTÊNCIA : (WARNING) PARA REDUZIR O RISCO DE INCÊNDIO OU CHOQUE ELÉCTRICO, NÃO EXPONHA ESTE APARELHO A CHUVA OU HUMIDADE.

PRECAUÇÃO : (CAUTION) A instalação deste aparelho deve ser feita por um profissional qualificado e deve obedecer a todos os códigos locais aplicáveis.
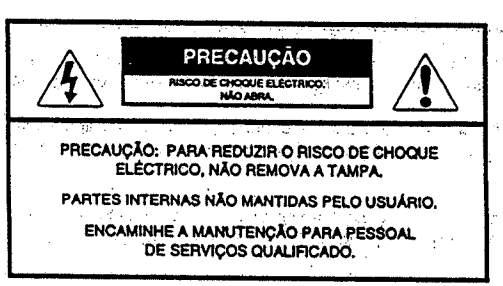
Modificação e informação sobre equipamento adicional citados neste manual são para o uso exclusivo do pessoal qualificado de instalação e manutenção.