BIAMP

10074 SW Arctic Drive
Beaverton, OR 97005

Tel:503-641-7287
Fax:503-626-0281

29 Series

Operation Manual

Table of Contents

Introduction 5

Control descriptions 6

Rear panel connections 10-11

Hook-up diagram 12

Installation diagram 13

3-Band equalization 14

Graphic equalizers 15

Setting the trim controls 15

Monitor mixing 16

Effects and reverb mixing 16

Submaster mixing 17

Channel patch connections 18

Power amplifiers 19

Grounding and shielding 19

Avoiding feedback 21

Modifications 22

Specifications 22

Block diagram 24

Warranty 25

Glossary of terms 26-30

Introduction

The Biamp Systems 29 Series powered mixers are the latest in a long line of quality equipment for professional audio from Biamp Systems. Each one has been designed to be a high performance, economical system for a wide variety of portable sound reinforcement applications. Biamp's extensive experience in making high quality professional sound equipment, along with valuable inputs from soundmen and musicians have combined to produce one of the finest powered mixers available anywhere. The result is a powerfully clean, transparent, natural sound—an accurate reproduction of the sound you want.

Unlike other powered mixers, quality, performance, and cosmetics were not sacrificed in the 29 Series. Instead, innovative engineering and careful optimization have brought improved performance at a reasonable price. For example, the balanced input stage of each channel uses both low noise discrete transistors and high speed low distortion BIFET op amps in a novel circuit configuration. The low noise, high CMRR (rejection of cable hum), freedom from transformer hum and increased headroom are just some of the benefits this topology brings. The input pad control is designed to reduce the gain of the input stage, not merely attenuate the signal, providing optimum signal to noise ratio regardless of the microphone used. The internal power amplifiers contain separate built-in fast acting positive and negative slope limiters which prevent clipping, allowing the mixer to be run at full output without worrying about distortion or speaker overload. Having almost no audible side effects, the limiters allow the mixing engineer to concentrate on getting the sound he wants rather than riding the faders. The 829 and 1229 will both operate into 2 ohm loads with ease, a capability not found in any other leading powered mixer.

Each channel features a three-band equalizer whose frequency characteristics have been designed to provide optimum control over the sound of each performer or instrument. Pan, effects and monitor controls have been included for each channel, enabling adjustment for any application. A fast acting LED indicator monitors the level of each channel, providing quick, accurate indication of signal levels and potential clipping. Versatile effects, subs and monitor circuits allow connection of the 29 series mixers to almost any system, simply and easily. An internal long spring Accutronics reverb coupled with a flexible reverb control and a reverb foot switch input allow the operator to adjust the dryness of the house and monitor mixes independently. The built-in nine band graphic equalizers provide flexible control over the house and monitor feeds giving the performer the ability to make it sound right, every time. Two built-in high power amplifiers driven simultaneously can supply up to 300 watts of clean power to the speakers, without risk of distortion. Headphone outputs are provided to allow monitoring the stage monitor or house speakers. Two 10-segment LED indicators display the amplifier outputs, avoiding the problem of watching a thin meter pointer in a dimly lit hall or nightclub while providing greater accuracy than conventional VU meters. Versatile patching connections are provided to permit use of the power amplifiers and equalizers separately or in various combinations with each other. Inputs and outputs are provided for use with a two channel tape recorder, facilitating the use of the submaster channels for stereo recording.

As with all Biamp products, the 29 series mixers are built to exacting standards. The lightweight yet rugged construction should provide years of reliable service. In the unlikely event servicing should be required, the thoughtful layout of circuit boards and hinged amplifier section should make servicing simple.

Control Descriptions

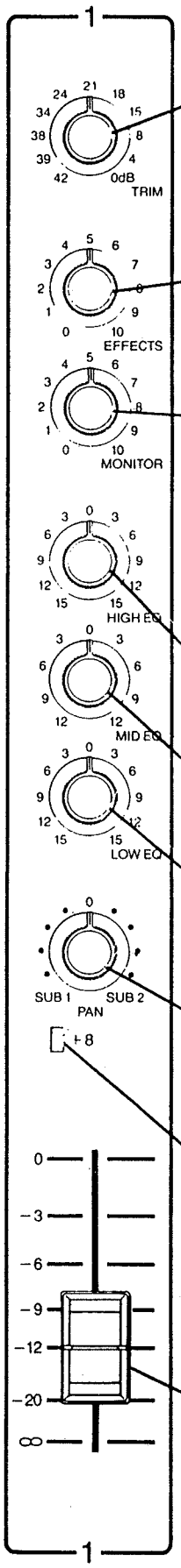

TRIM
The TRIM control adjusts the attenuation of the input signal from a minimum of 0dB (clockwise) to a maximum of -42dB (counterclockwise). It is calibrated in dB increments corresponding to the amount of reduction in channel gain. The TRIM control affects both the microphone and line inputs simultaneously, allowing a wide variety of input levels to be accommodated. The TRIM control should be adjusted to provide the optimum travel on the channel fader without causing the channel to overload.

EFFECTS
The EFFECTS knob controls the amount of channel signal applied to the effects mix bus. This channel signal is taken after the fader and equalization controls (Post-fader, Post-eq). The effects mix bus is used to drive both the output jack (EFX OUT) on the rear panel and the internal reverb unit. Therefore the effects control will vary the amount of channel signal in both of these feeds.

MONITOR
The MONITOR control sets the level of the channel signal directed through the monitor mix bus to the MONITOR fader and on to the output jack (MON OUT) on the rear panel. The monitor signal is dependent on the setting of the TRIM control but is unaffected by channel fader or equalizer settings (Pre-fader, Pre-eq). This signal is intended to be a separate mix for stage monitor amplifiers and speakers.

CHANNEL EQUALIZER
The three equalizer controls allow adjustment of the signal frequency balance to compensate for different microphone characteristics or placement, acoustic feedback (howling), inter-microphone leakage, etc. If all controls are set to the center position, the frequency response would be flat. A clockwise rotation causes a boost in response while a counterclockwise rotation causes a cut. For a more detailed description of the equalizer response, see page 14 on equalization.

HIGH EQ
The high frequency control is a shelving type offering 15dB of boost or cut for signals above 8kHz.

MID EQ
The MID EQ control has a peaking characteristic centered at 3kHz, with a maximum boost or cut of 12dB.

LOW EQ
The low frequency equalization control is a shelving type providing 15dB of boost or cut for signals below 50Hz.

PAN
The signal from the input channel may be fed to submaster 1, submaster 2 or both subs simultaneously. With the control counterclockwise (labeled SUB 1) all of the signal goes to SUB 1. As the knob is rotated clockwise the signal is gradually shifted to SUB 2. With PAN fully clockwise all of the signal is fed to SUB 2. When the control is centered equal amounts of the channel signal appear in each submaster.

+ 8 LED
This indicator will flash when the program level after the equalizer exceeds + 8dBv. When this occurs there is approximately 10dB of headroom left before clipping. If the LED is lit continuously the input channel is probably being overloaded. Should this happen, reduce the TRIM control until the LED only flashes occasionally.

CHANNEL FADER
This is an oil damped straight line control which varies the channel signal level before it is fed to the submasters. This control also varies the level of the effects bus feed.

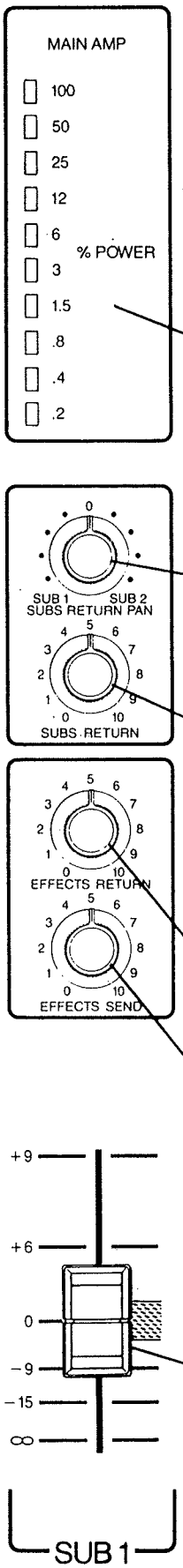

MAIN LEVEL INDICATOR
The 10-segment LED display located above the SUB 1 fader monitors the level of the main output amplifier. Each step is 3dB, giving the indicator a 27dB range (a 500:1 power range). The response characteristics of the circuit have been designed to indicate the average level of the signal. The indicator will always display the level at the main power amplifier output, even if it is patched into another signal, and no matter what the speaker load impedance.

SUBS RETURN PAN
The SUBS RETURN PAN allows the subs return signal to be assigned to either submaster or to be split in any ratio between them. Its operation is identical to the input channel PAN controls. With the SUBS RETURN PAN counterclockwise the signal is only sent to SUB 1, clockwise feeds it only to SUB 2. Positions between these extremes apply the subs return signal in any ratio between the two subs.

SUBS RETURN
The SUBS RETURN adjusts the level of the subs return input signal before it is sent to the SUBS RETURN PAN. Its action is similar to that of the channel faders except that it is a rotary control.

NOTE: The subs return signal enters the mixer via the line level SUBS RETURN jack on the rear panel of the mixer. This input is a handy place to insert signals from a tape recorder, a second mixer or other line level source.

NOTE: Using external effects units, an external special effects box such as a flanger, time delay, or reverb unit may be connected to the mixer and controlled via the effects controls on each channel. A line level effects send jack and a line level effects return input jack appear on the rear panel for this purpose. The effects send and return controls and associated jacks have no effect on the internal reverb.

EFFECTS RETURN
The signal returning from the external effects device is controlled in level by the EFFECTS RETURN knob. After adjustment the effects signal is mixed directly with the signal going to the MAIN output fader.

EFFECTS SEND
The EFFECTS SEND control adjusts the level of the effects send signal on the rear panel. This signal is the sum of all the effects signals from the individual effects knobs on the input channels.

SUB 1 FADER
The SUB 1 FADER controls the level of the signal appearing on the sub 1 mix bus. The output of this bus is fed to the SUB 1 OUT on the rear panel of the mixer and is combined with the sub 2 mix bus output and fed to the MAIN FADER.

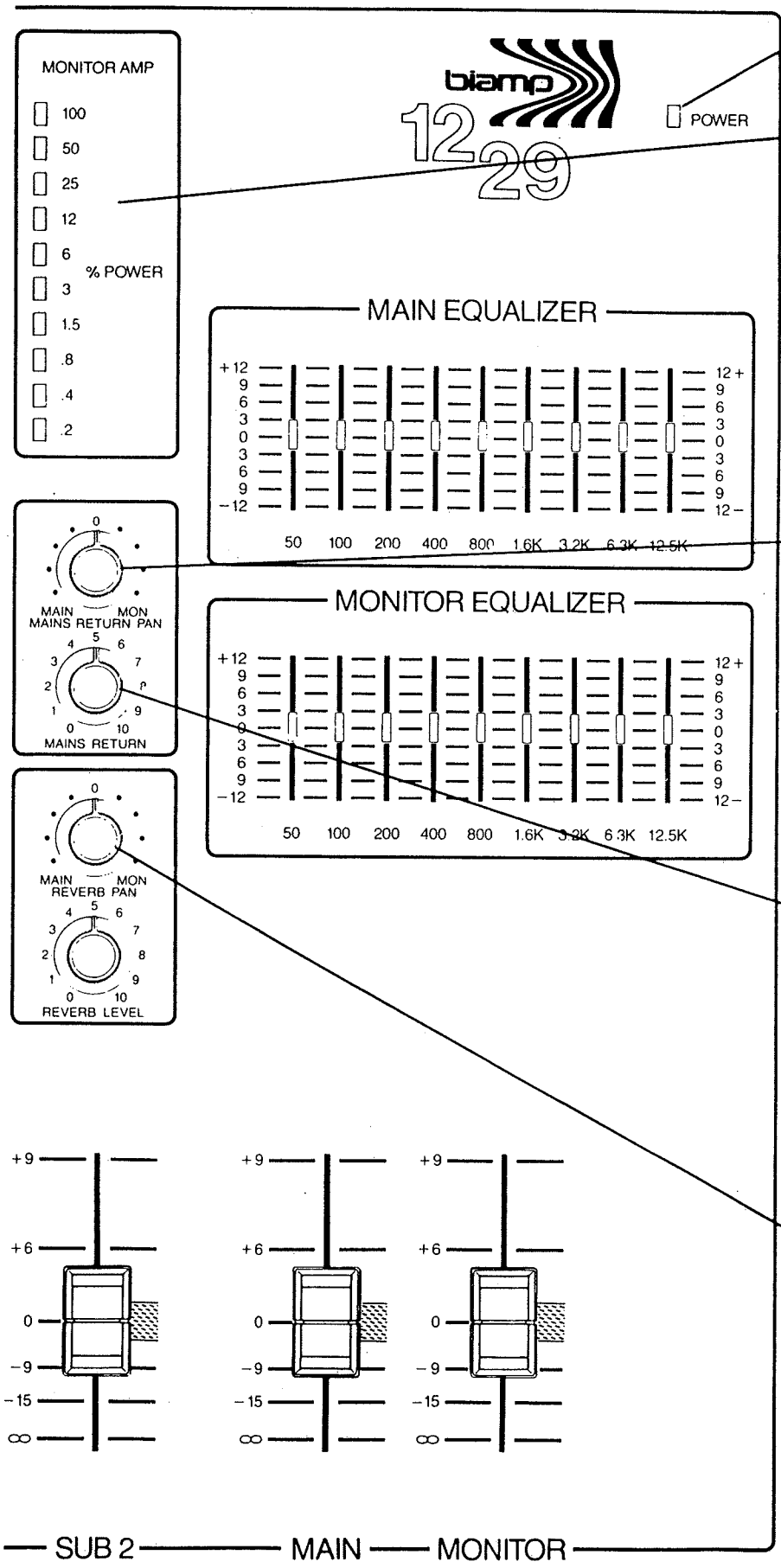

POWER INDICATOR
This green LED lights when power is applied to the mixer and the power line fuse is good.

MONITOR OUTPUT LEVEL INDICATOR
The 10-segment LED display located above the SUB 2 fader indicates the percentage of power of the monitor speaker output (available at the two Monitor speaker jacks on the rear panel). Each step is 3dB (twice the power), giving the indicator a 27dB range. The response characteristics of the circuit have been designed to indicate the average level of the signal. The indicator will always display the level at the monitor power amplifier output, even if it is patched into another signal.

MAINS RETURN PAN
The MAINS RETURN PAN allows the mains return signal (from the MAINS RET jack on the rear panel) to be assigned to either the main or monitor mix busses or to be split in any ratio between them. Its operation is similar to the other pan controls on the mixer except that it pans between the mains and monitor instead of the subs. With the MAINS RETURN PAN counterclockwise the mains return signal is sent to the MAIN fader. With the control clockwise the signal goes to the MONITOR fader.

MAINS RETURN
This knob controls the gain from the MAINS RET jack on the rear panel to the MAINS RETURN PAN.

NOTE: The internal reverb and associated circuitry derives its input from the EFFECTS controls on each input channel (the EFFECTS SEND and EFFECTS RETURN controls in the master section have no effect). The output of the reverb (the "wet" signal) is fed to the master reverb controls.

REVERB PAN
This control allows the wet signal from the internal reverb to be assigned to either the main or monitor mix busses or to be split in any ratio between them. Its operation is similar to that of the other pan controls in the 29 series except that it pans between the mains and monitor instead of the subs. With the REVERB PAN counterclockwise the wet signal is sent to the MAIN fader. With the control clockwise the signal goes to the MONITOR fader.

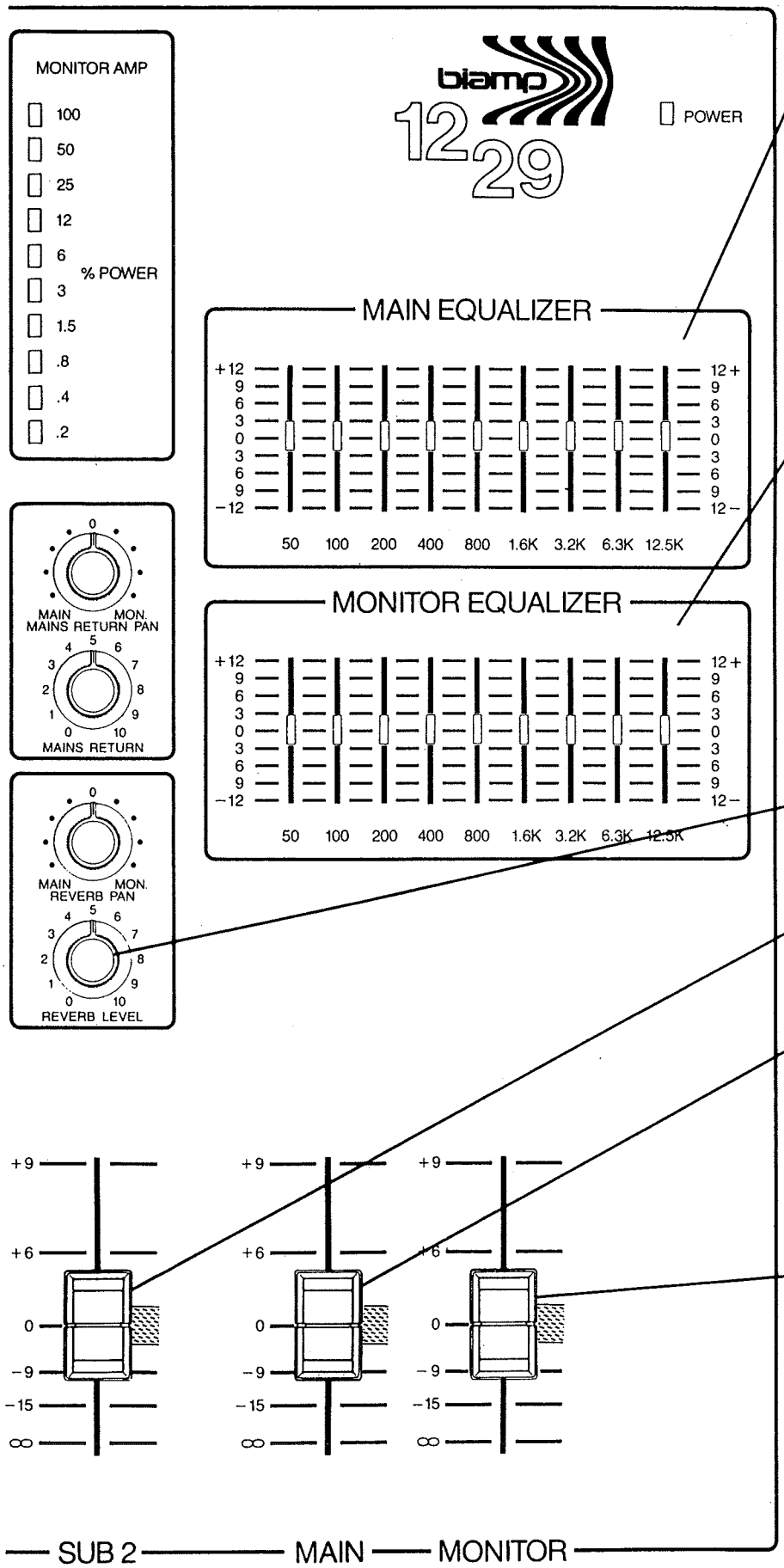

MAIN GRAPHIC EQUALIZER
This set of nine sliders allows adjustment of the main channel sound level in each of nine octave frequency bands from 50 Hz to 12.5 kHz. Each control is capable of boosting or cutting the sounds in its range by up to 12 dB. As each control is moved upward the amplitude is increased, downward movement decreases the level. The resulting position of the controls is representative of the equalizer frequency response. The faders are detented in the center to assist in setting a flat frequency response.

MONITOR GRAPHIC EQUALIZER
This set of nine sliders allows adjustment of the monitor channel sound level in each of nine octave frequency bands from 50 Hz to 12.5 kHz. Each control is capable of boosting or cutting the sounds in its range by up to 12 dB. As each control is moved upward the amplitude is increased, downward movement decreases the level. The resulting position of the controls is representative of the equalizer frequency response. The faders are detented in the center to assist in setting a flat frequency response.

REVERB LEVEL
The REVERB LEVEL is the master reverb level. It adjusts the amount of the total reverb sound.

SUB 2 FADER
The SUB 2 FADER controls the level of the signal appearing on the sub 2 mix bus output and fed to the MAIN FADER.

MAIN FADER
This control adjusts the amplitude of the MAIN OUT signal appearing on the rear panel of the mixer. The signal is the combination of the SUB 1 FADER, SUB 2 FADER, MAINS RETURN PAN, REVERB PAN and EFFECTS RETURN signals, and is fed to the main equalizer and main amplifier.

MONITOR FADER
This control adjusts the amplitude of the MON OUT signal appearing on the rear panel of the mixer. The signal is the combination of the signals from the MAINS RETURN PAN, REVERB PAN and each of the MONITOR knobs on the input channels, and is fed to the monitor equalizer and monitor amplifier.

Rear Panel Connections

MONITOR SPEAKERS
These two jacks are provided for connecting the stage monitor loudspeakers to the monitor power amplifier output. Operating by itself, this output is capable of 200 watts into 8 ohms, 330 watts into 4 ohms and 500 watts into 2 ohms. If both amplifiers are operating, the main power amplifier will produce 150 watts into 8 ohms, 22o watts into 4 ohms, and 300 watts into 2 ohms.

CHANNEL PATCH
The CHANNEL PATCH jacks provide a means of accessing the channel signal after the TRIM and EQ controls. These are 3-conductor ("stereo" or "tip, ring, sleeve") ¼" jacks, designed to mate with 3-conductor plugs only. The tip signal is the preamp output (post-eq, pre-fader) and should be wired to the input of the external device. The ring connection is the fader input, providing signal to the CHANNEL FADER, PAN control and EFFECTS control. The MONITOR signal is unaffected by the CHANNEL PATCH connector. Examples of devices that might be connected here include compressor/limiters (such as the Biamp Quad Limiter), equalizers (such as the Biamp EQ110, EQ210 or EQ270A), and noise gates. If it is only desired to get a direct channel output without disturbing the normal functioning of the channel, wire the tip and ring together and use this connection for your output. For more details see the applications section of this manual.

MONITOR HEADPHONES
Standard stereo headphones may be plugged into this jack for listening to the monitor power amplifier output.

MAIN HEADPHONES
Standard stereo headphones may be plugged into this jack for listening to the main power amplifier output.

MAIN SPEAKERS
These two jacks are provided for connecting the house loudspeakers to the main power amplifier output. Operating by itself, this output is capable of 200 watts into 8 ohms, 330 watts into 4 ohms and 500 watts into 2 ohms. If both amplifiers are operating, the main power amplifier will produce 150 watts into 8 ohms, 220 watts into 4 ohms, and 300 watts into 2 ohms.

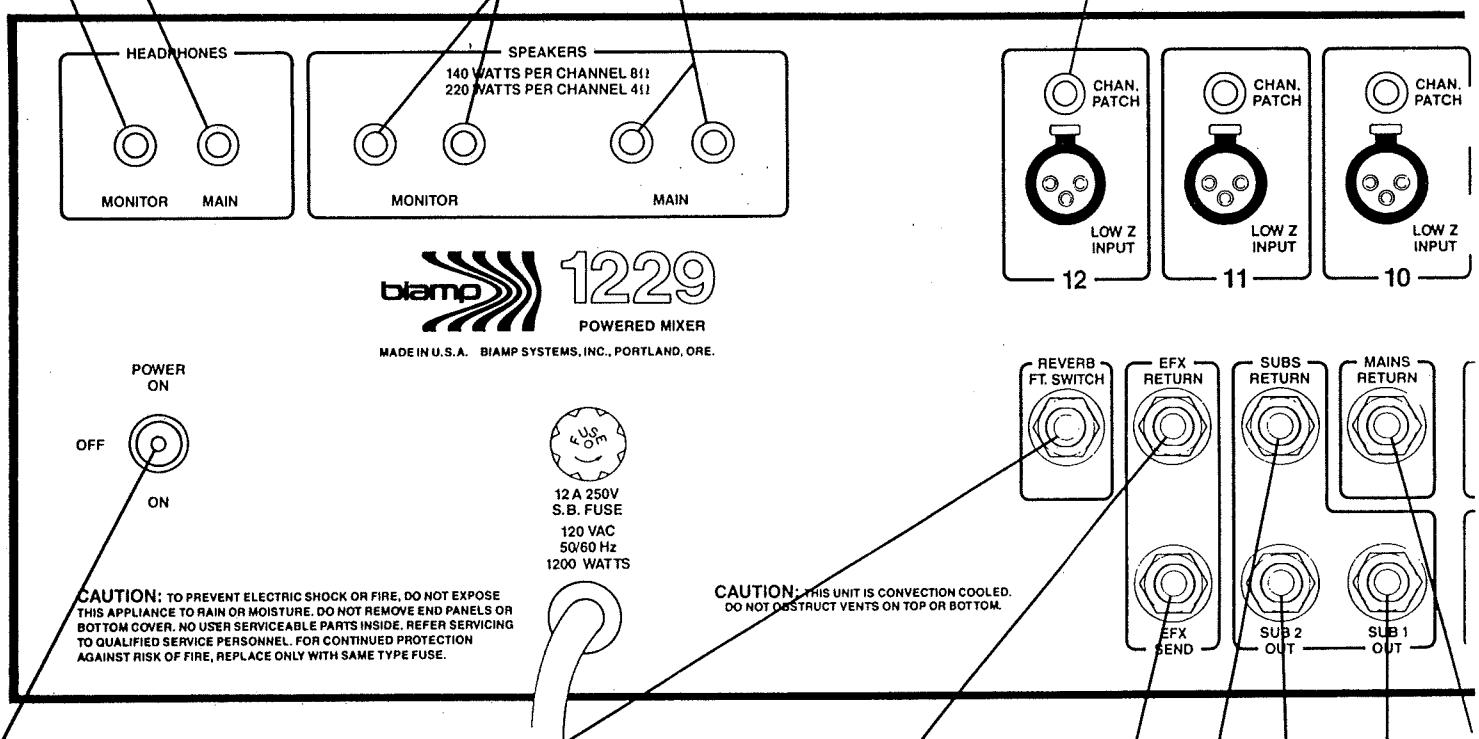

POWER ON/OFF/ON
This switch controls the master power to the mixer. The two ON positions provide electrical reversal of the AC line polarity to aid in reducing hum.

REVERB FT. SWITCH
This jack allows accessing the output of the internal reverb unit. Shorting the tip to sleeve of a plug inserted here will mute the reverb signal, allowing remote control of the reverb. This jack may also be used as a reverb output for feeding other mixers or for returning to the 29 series mixer via one of the return jacks, such as the subs return jack if operating in stereo.

EFX RETURN (Effects Return)
The EFX RETURN jack accepts an unbalanced line level input to feed the main mix bus via the EFFECTS RETURN level control.

EFX SEND (Effects Send)
This 2-conductor output jack is a line level composite signal from all of the input channel EFFECTS controls. The signal is then passed through the EFFECTS SEND control to provide overall gain adjustment.

SUBS RETURN
This input jack applies the signal directly to the SUBS RETURN level control. After the level control, by using the SUBS RETURN PAN, the user may split the returned signal between SUB 1 and SUB 2.

SUB 2
This 2-conductor phone jack carries the unbalanced line level output signal from the SUB 2 FADER.

SUB 1
This 2-conductor phone jack carries the unbalanced line level output signal from the SUB 1 FADER.

MAIN OUT
The MAIN OUT signal is the output of the MAIN FADER which in turn is the combination of the SUB 1 FADER, SUB 2 FADER, MAINS RETURN PAN, REVERB PAN and EFFECTS RETURN. This unbalanced output may be used to feed an external power amplifier.

MAIN EQ OUT
This jack carries the output of the main graphic equalizer. Inserting a plug into this jack has no effect on the signal.

MAIN EQ IN
This two-conductor phone jack allows accessing the input of the main channel graphic EQ. Inserting a plug will disconnect the main signal from the graphic equalizer input and connect the signal present on the plug. Since the main power amplifier is normally connected to the graphic equalizer output, this will also affect the main power amplifier output.

MAIN AMP IN
This two-conductor phone jack allows accessing the input of the main channel power amplifier. Inserting a plug will disconnect the main graphic equalizer output from the power amplifier input and connect the signal present on the plug. Running a patch cable from the MAIN OUT to the AMP IN will bypass the equalizer entirely, leaving it free to be patched into other circuits.

LINE INPUT
These ¼" phone jacks accept line level inputs from sources such as tape recorders, wireless microphone receivers, other mixers, synthesizers, instrument amplifiers, high impedance microphones, etc.

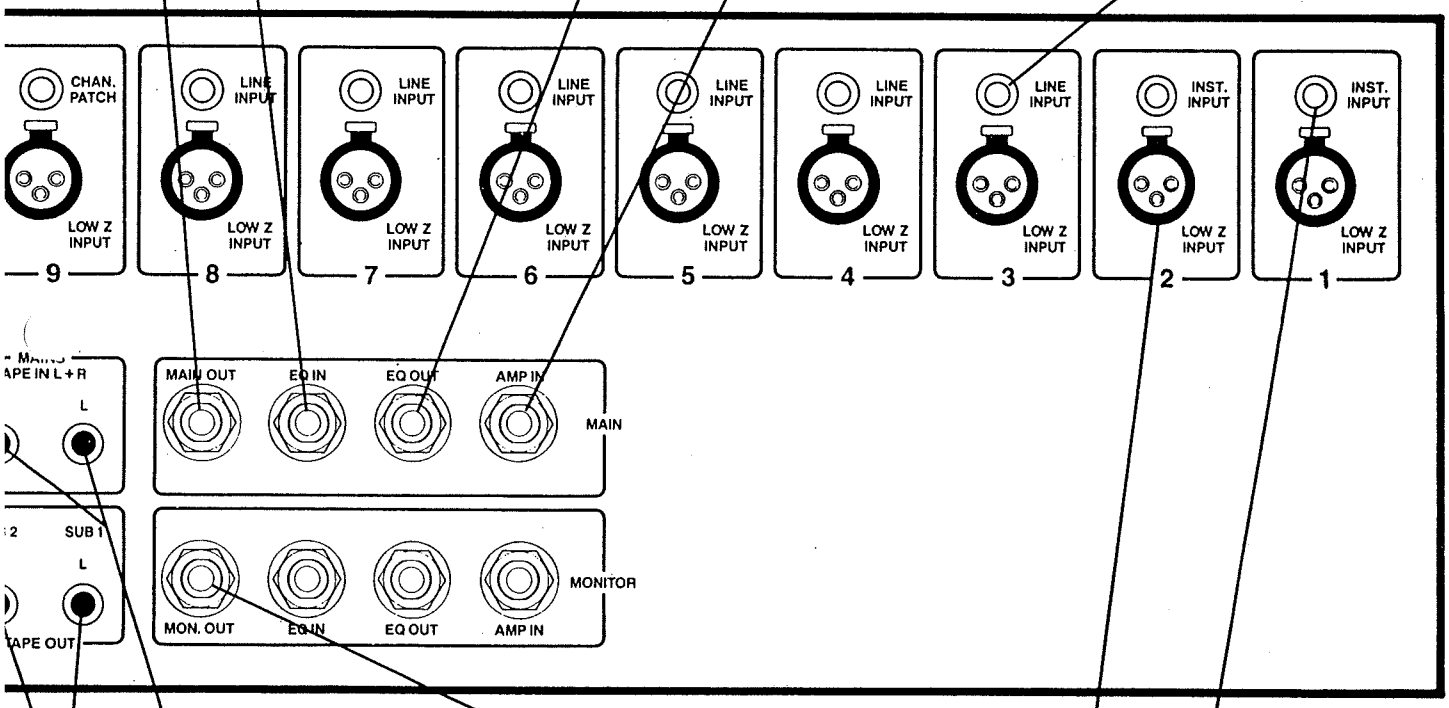

MAINS TAPE IN L + R
The line level playback signals from a tape recorder may be connected here for mixing back into the main channel mix bus. The two signals are combined with each other and with the signal from the MAINS RETURN jack before being sent to the front panel MAINS RETURN control.

MONITOR OUT
This jack is fed directly from the output of the MONITOR FADER. This signal is the sum of the signals from all the MONITOR controls on the input channels, the MAINS RETURN PAN, and the REVERB PAN. This unbalanced signal drives the power amplifier.

INST. INPUT
These ¼" phone jacks provide a high sensitivity-high impedance input suitable for use with low level musical instruments or high impedance microphones. These inputs are approximately 20 dB more sensitive (10 times more gain) than the line inputs.

TAPE OUT SUB 1 SUB 2
These RCA-type phono jacks duplicate the normal SUB 1 and SUB 2 outputs. They are intended for driving a tape recorder with a stereo mix. The signals are derived from the outputs of the SUB 1 and SUB 2 faders and are post-fader.

LOW Z INPUT (Microphone Input)
These XLR type connectors provide a *balanced* transformerless input for *low impedance microphones*. The connector is wired according to the DIN standard, pin 2 being high, pin 3 being low, and pin 1 being shield or ground. The input may be user-wired to supply phantom powering for condenser microphones which do not have internal batteries (see the modifications section of this manual)

MAINS RETURN
The MAINS RETURN input jack applies signal directly to the MAINS RETURN level control. After passing through the level control the signal is split between the mains and monitor mix busses by the MAINS RETURN PAN.

Hookup Diagram

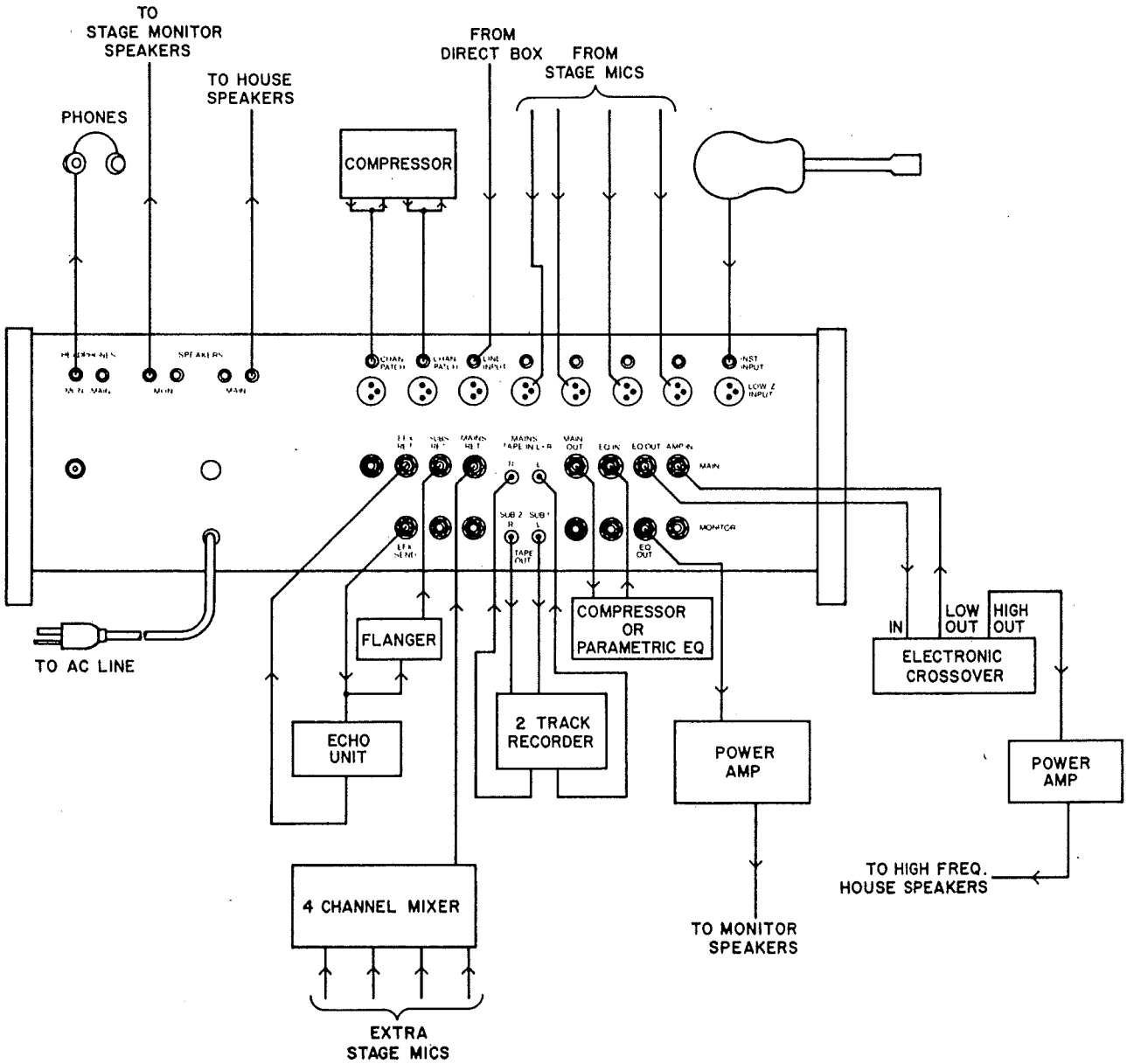

Installation Diagram

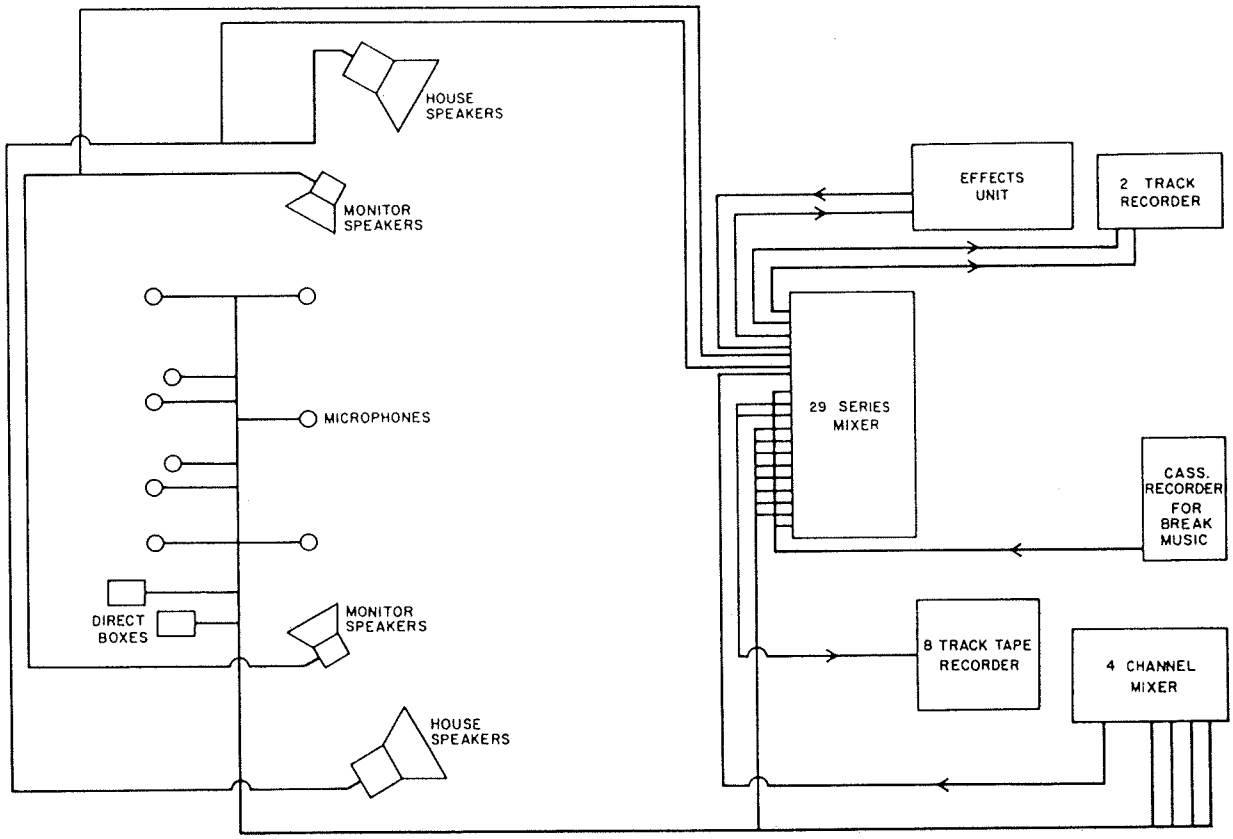

CAUTION

When installing the 29 Series powered mixers, it is important that none of the cooling vents be blocked in any way. The mixer has vents in both the top and bottom. Therefore nothing should be placed on the mixer which would block air flow. Cables should not be run under the mixer or stuffed under to get them out of the way. If the mixer is placed on carpet, books or other large flat items should be placed under the corners to insure adequate airflow.

3-Band Equalization

The versatile equalization controls on the 29 series input channels (LOW EQ, MID EQ, HIGH EQ) have many applications in sound recording and reinforcement. You should start by familiarizing yourself with what they do and how they sound. The graph below shows the action of each EQ control. Try listening to some music through an input channel and get a feel for what each of the three knobs does.

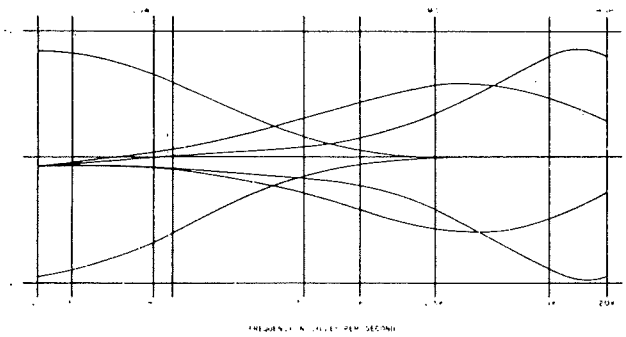

The **LOW EQ** control is of the shelving type, with a maximum boost or cut at 50Hz or 15dB. The turnover frequency is 1kHz, which means that it will start affecting sounds below this frequency but will have more effect at lower frequencies.

The **MID EQ** control is a peaking type unit, with a maximum boost or cut at its 3kHz center frequency of 12dB. A peaking control is one which amplifies or cuts a band of frequencies around its center frequency. In the boost position the frequency response looks like a mountain peak, hence the name.

The **HIGH EQ** control is also of the shelving type. It is capable of a maximum boost or cut at 8kHz of 15dB.

The most obvious application of the equalizer is to change the timbre of vocals or instruments and make them sound different. This can be used to obtain special effects or it can be used to compensate for deficiencies in instruments, vocal range, mics or speakers. It is certainly true that you can't make a silk purse out of a sow's ear, but you can make a pretty good imitation out of some nylon! If you don't think the sound is quite what you want there is nothing wrong with trying to improve it some. Don't expect miracles, but don't be afraid to try.

Another area in which the flexible equalization of the 29 series comes in handy is compensating for microphone placement. It is well known that instruments and people don't sound the same in front as they do at the sides or in back. Also the confines of the stage (especially in a theatre application) sometimes dictate odd microphone locations in order to make them less obtrusive. The sound man has to make it sound good anyway, and can usually improve things with the channel equalization controls. Floor mic pickups such as the SHURE Mic Mouse™ or the CROWN PZM™ units often need some low frequency cut to reduce noise caused by vibration from people walking around or cars, trucks, and subways nearby. Most instruments and vocals don't have much low frequency energy, and the ones that do (such as drums and bass guitars) are loud enough to mask the noise anyway. Air conditioner noise is sometimes a problem with microphones near the walls. Some low frequency cut and some high frequency cut will often help.

Boost should be used sparingly on any of the equalizer bands. The chance for acoustic feedback increases greatly anytime the gain of the system is increased at any frequency. If an instrument does not have much energy in a particular frequency band it is a good practice to apply some cut with the appropriate EQ control. This allows an extra margin of safety before things start to sing. Acoustic feedback can start to mess things up even before the system reaches its potential. The system will begin to sound like it is hard to understand, almost like a bad reverb. The equalizer is no substitute for an inadequate speaker or poor microphone.

Instruments on a small stage have a habit of spilling over into each other's microphones. The simple fact may be that you can't get them far enough apart. If you encounter this problem, the channel equalizers can again help somewhat. By reducing the response at frequencies outside the range of the instrument that you want to pick up, the energy in the interfering instrument will be reduced. For example, say there is a kick drum in channel 1 and an acoustic guitar in channel 2 and there is some of each instrument leaking into the other one's mic. By cutting the high frequencies on the bass channel (1) and reducing the bass on channel 2 (the acoustic guitar) the separation would be substantially improved.

Directional microphones have what's known as the proximity effect. As sounds get very close to them the bass response of the microphone rises. This becomes a serious problem with individuals who don't know how far from a mic to stand. If you can't get the person to stop swallowing the mic, try turning down the LOW EQ control on their channel. Another related problem is the wind and pop noises that sometimes come out of a mic when someone gets too close. There are windscreens on the market for most mics but sometimes the problem is too severe for them alone to fix. In this case the LOW EQ and HIGH EQ controls may be turned down to help filter it out.

Although not recommended for HI-FI type permanent use, the channel tone controls on the 29 series can be

used to make a quick RIAA phono preamp out of a mic input. Set the LOW EQ control to maximum clockwise position and the HIGH EQ control to maximum cut position and feed the signal to the microphone input. This comes in handy for playing records between acts or at meetings where a record needs to be mixed in with someone speaking. The biggest drawback of this approach is the impedance mismatch between the cartridge and the mic input. The equalization controls can be "fine tuned" to make it sound pretty reasonable, but don't expect state-of-the-art sound quality. Low cost phono preamps are available for use with the mixer's line input jacks.

Graphic Equalizers

Two graphic equalizers are provided which control the main and monitor outputs. These are each nine band, octave width, peaking equalizers. Each control is capable of up to 12dB of boost or cut at its center frequency. The characteristics of the equalizers are shown in the graph below. When adjacent controls are adjusted the response will change smoothly between the values set on each control.

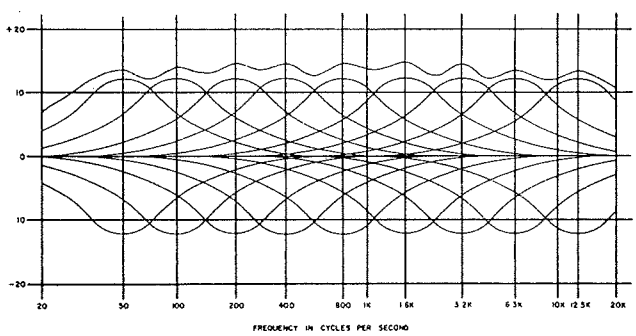

One or both of the graphic equalizers may be patched into any other circuit desired by using the four MAIN or MONITOR patch jacks. For example, to use the monitor graphic to equalize the effects signal the following connections would be necessary. First patch the MON OUT to the monitor AMP IN. This removes the equalizer from the monitor amplifier circuit and gives an unequalized monitor speaker feed. The EFX SEND is patched to the monitor EQ IN, feeding the effects signal to the graphic equalizer input. By patching the EQ OUT to the EFX RETURN, the equalized signal is returned to the EFFECTS RETURN control.

The graphic equalizers are handy for correcting response irregularities in speakers and for reducing feedback in rooms. Using a real time analyzer and a pink noise generator it is simple to equalize the loudspeakers for flat response. The pink noise source may be connected to one of the line inputs or to one of the three return inputs (EFX RETURN, SUBS RETURN, or MAINS RETURN). The analyzer is placed in the audience (for the house speakers) or on the stage (for the monitor speakers) and the graphic is adjusted for a flat response. Often sound men prefer to adjust the graphic equalizers by ear using some familiar music as a program source.

Setting the Trim Controls

The individual channel TRIM controls are designed to adjust the gain of the input stage to optimize the signal to noise ratio and dynamic range. By adjusting these controls a wide range of signal sources and input levels can be accepted without overload or excessive noise. Another feature of the input TRIM controls is the ability to optimize the settings of the channel faders. By first setting the fader to the -6dB position, and then adjusting the TRIM control for a roughly correct mix the fader will be operating at its optimum position for controllability. Care should be taken when doing this that the +8dB overload indicator is not lighted continuously or the channel circuitry may be clipped. There is a fair amount of learning involved with setting the TRIM controls and each person will develop a technique that he/she is most comfortable with. However, the following procedure should help you get started.

Connect your signal source to the channel input on the rear of the mixer. The XLR connector should be used for low impedance microphones while line inputs should be connected to the phone jack line input. Electronic instruments or high impedance microphones should be connected to the INST. INPUT jacks. These are provided on channels 1 and 2 of the 29 series mixers. If more INST. INPUTs are required, some of the LINE INPUTs or CHAN. PATCH jacks may be converted. (See the modifications section of this manual.) The TRIM control should be set initially by the following table:

Input Source	*TRIM setting*
Professional Equipment Line Inputs	42
Hi-Fi, Semi-Pro Line Inputs	35
Musical Instruments, Amplified	35
Wireless Microphone Receivers	32
Condenser Microphones	30
Average Microphones	20
Low Level Microphones	10

Apply typical signals to the channel and adjust the other controls on the mixer for a rough mix. Check that none of the + 8dB level indicators are flashing except briefly on peaks. If they are, the TRIM for that channel should be set to a higher number (counterclockwise). If all are OK, the faders should be checked to make sure that there is adequate range for adjustment. If any faders are close to the top or bottom of their travel when the rough mix is set, the appropriate TRIM control should be adjusted to bring the fader in line with the others. If doing this causes the + 8dB LED to flash you will have to find a compromise position of the TRIM and fader controls.

The ultimate setting of the TRIM and fader controls will depend on the particular situation at hand. Following the above guidelines will get you started. However, the optimum settings may change throughout the performance and you should be alert to the changing conditions. For example, if one musician plays both saxophone and trumpet the setting you find for the trumpet may not be right for the sax. If two different singers will use the same microphone, the settings for one will probably not be right for the other. A less obvious problem concerns the tendency for ears to get less sensitive as they are exposed to high levels. As musicians play at high levels they tend to play louder and louder, often several dB, as their ears adapt to the increased sound pressure level. This is particularly true in the stage monitor mix.

Monitor Mixing (Foldback)

The MONITOR controls on each input channel, the monitor mix bus, and the MONITOR FADER constitute a "mini mixer" within the 29 series mixing console. These controls tap into the channel signals before the channel EQ and channel fader circuits. They provide a separate, unequalized mix for use in driving the on-stage monitor system. Equalization is available in the monitor graphics EQ but this affects the entire monitor mix. This allows the musicians to hear each other play, even under less than ideal stage conditions. In live performances, the monitor mix is usually fed to on-stage speakers. In recording studio applications, it may be fed to a headphone distribution system.

The channel MONITOR controls determine the amount of that channel's signal fed to the monitor mix bus. The only other channel control that will affect the monitor signal is the input TRIM. This means that changes in the house mix will not affect the monitor mix on stage. This prevents the musicians from losing their monitor when the soundman fades out the sound at the end of a song.

In general it is a good idea to use as little equalization as possible for the stage monitors, except perhaps for some low frequency roll-off. Cutting bass frequencies helps reduce acoustic feedback, and there is usually plenty of bass on stage without reinforcement from the monitor speakers. Usually it is best to use two graphic equalizers for the monitor output. The requirements on the monitor equalization seldom match that of the main feed, so a compromise would be necessary. Also, the graphic equalizer is a much better tool for coping with the odd problems of stage equalization. As with the channel EQ, boost should be used sparingly. Any time boost is used the risk of acoustic feedback increases greatly.

The MAINS RETURN PAN and REVERB PAN controls may be used to add effects and reverb to the monitor mix. It should be noted that the effects and reverb signals are post-fader/post-eq and will vary with the channel faders and channel EQ. Reverb and effects should be used sparingly in the monitor mix since some of this signal will be picked up by the stage microphone again, resulting in feedback.

Effects and Reverb Mixing

The effects mix bus serves a dual purpose in the 29 series. It provides the send signal for the internal reverb and it feeds external effects units through the EFFECTS SEND control and the effects output jack. The effects mix bus signal is derived from each of the channel EFFECTS controls, which are mixed together and fed to both the EFFECTS SEND control and the internal reverb unit. The drive level for the internal reverb unit is controlled by the individual channel effects controls. The EFFECTS SEND control adjusts the level to the buffer amplifier which drives the rear panel EFX SEND jack.

The individual channel EFFECTS controls derive their signals after the channel faders and the equalization controls (post-fader, post-eq). This forces the effects and reverb on a channel signal to stay balanced with the signal feeding the submasters. This way, if an instrument is faded down it is not necessary to fade the effects signal at the same time.

On return from the external effects processing the effects signal may feed the EFFECTS RETURN control (via the EFX RETURN jack) or may feed the MAINS

RETURN circuitry (via the MAINS RETURN jack). Which input you use depends on your particular application. The SUBS RETURN may also be used for bringing the effects signal back in, allowing panning of the effects between the submasters. This is especially useful if the board is being used for stereo mixing, since the effects may then be panned across the stereo image.

The normal method of connecting several effects units to the effects circuit is to connect the devices in series. This means that the EFX SEND jack drives the first effects device, its output then drives the second device, the second device drives the third, and so on. The last effects unit's output is returned to the console by whatever input you choose. An alternate approach is to connect the inputs of the effects units in parallel. This means that all of the inputs are wired together and are fed from the EFX SEND jack simultaneously. The outputs of the effects units are then returned to separate inputs of the mixer. For example, one may feed the MAINS RETURN, one may feed the EFFECTS RETURN and one may feed the SUBS RETURN.

Since the effects mix bus drives the internal reverb directly (without a reverb send control) it is necessary to take care not to overload the reverb unit. If this happens the reverb will sound raspy and distorted. The drive may be reduced by turning down each of the channel EFFECTS controls slightly. The EFFECTS SEND control may then be increased to bring the effects output level back for proper balance.

A REVERB FT. SWITCH jack is provided for remote control of the reverb. By shorting the tip to sleeve of a phone plug inserted into this jack, the reverb will be stopped. Since the reverb signal is present on this jack it may be used as a reverb output to feed equalizers or other effects units. The signal would then get returned to the console via one of the return jacks. The use of the REVERB FT. SWITCH jack as an output does not affect the normal operation of the reverb controls.

Submaster Mixing

Submasters, or subs as they are sometimes called, provide the ability to mix the input channels into smaller groups. These groups may then be mixed into the main output with the submaster faders. With the two submasters in the Biamp 29 series, it is like having two mixers in one. The flexibility of the subs permits a wide variety of applications which would otherwise be impossible. A few of these are described below.

SUBMASTER FOR GROUPS OF RELATED INPUTS

Most often a submaster is used to control the level of a group of related input channels with a single fader. When this is done the inputs are referred to as a subgroup. To see how this might be used, let's consider a couple of examples. Suppose you assign all drum, percussion and rhythm inputs to SUB 1; all guitar, keyboard and other melody inputs to SUB 2. The vocals are then split equally between the two subs by centering their PAN controls. The relative level, the reverb/effects send, and the specific equalization required for each would be set on the individual input channels. The submasters may then be used to adjust level of the groups, and thereby balance the mix, without havng to fiddle with each input channel. The balance between the rhythm and melody may be done with the two subs, while the vocals remain at roughly a constant level. The vocals may then be adjusted with the appropriate channel fader.

Consider another case, where the band you're working with has a lead vocalist and several musicians. Each musician also sings backup vocals on some of the songs. You could assign all instruments to one sub and assign the vocals to the other. This allows the vocal to instrument balance to be adjusted easily—an important consideration in acoustic feedback-prone environments.

SUBMASTERS FOR DIFFERENT SETUPS, ACTS OR SCENES

Sometimes two or more groups of performers (or stage acts) will be scheduled for a given show. This might necessitate a major change in the way the mix is set, and the time or effort required to completely readjust the console would be more than the schedule would allow. A related problem would be an act that changes instrumentation or stage arrangement sufficiently that the mixing requirements would need a sudden change. In these situations the submasters can be used to "preset" the console.

Suppose the first act in a nightclub is a comedian with his own small backup group. This requires two lead mics (a wireless and one on a stand), and three instrument mics. All of these inputs would then be assigned to SUB 1. The next one is the featured pop music group. They required a different setup, several mics for vocals and acoustic guitar and three direct feeds for their electronic instruments. These inputs may then be assigned to SUB 2. When the two acts change, the soundman does not have to scramble a dozen faders and another dozen equalization and effects knobs. All he needs to do is bring down SUB 1 and bring up SUB 2.

SUBMASTERS FOR STEREO MIXING

It is sometimes desirable to have a two-channel or stereo sound reinforcement system. A stereo feed is also required if the console is used for recording applications. This can be accomplished quite easily with the

two submaster outputs. Each submaster output can be fed to one of the power amplifiers and from there to the appropriate speaker. This arrangement is also handy for theatre drama work because the channel PAN controls can then be used to make voices appear to move across stage with the actor.

Using the 29 series as a powered stereo mixer requires two short phone plug to phone plug cables. One cable should run from the SUB 1 OUT on the rear panel to the MAIN EQ IN jack. The other cable should go from the SUB 2 OUT jack to the MONITOR EQ IN jack. The MAIN amplifier output will then be the SUB 1 or left output while the MONITOR amplifier output will be the SUB 2 or right output. The main and monitor LED indicators become SUB 1 and SUB 2 indicators respectively. The graphic equalizers will affect the SUB 1 and SUB 2 signals, the main EQ corresponding to the SUB 1 and the monitor EQ corresponding to the SUB 2. If the graphic equalizers are not needed, the patch cables may be run from the SUB 1 and SUB 2 outputs to the main and monitor AMP INPUTs. This leaves the equalizers free for other purposes. They may be patched into input channels or one may be used to equalize the effects signal (see the EQ section for details).

Effects return signals must be fed into the SUBS RETURN jack to be properly mixed into the two subs. The SUBS RETURN PAN may then be used to pan the effects signal between subs. To obtain reverb with this arrangement the REVERB FT. SWITCH jack may be used as a reverb output. Using a patch cable, connect the REVERB FT. SWITCH jack to the SUBS RETURN. The SUBS RETURN control then adjusts the reverb level while the SUBS RETURN PAN will split the reverb between the two channels. Unless the MAIN OUT or MONITOR OUT are still being used it is advisable to keep the REVERB LEVEL control fully counterclockwise since it does not affect the SUB 1 or SUB 2 outputs. When the submasters are used as a stereo mixer it is still possible to use the main and monitor channels for other purposes. For example a separate monitor mix may be necessary to drive the stage monitor speakers or a monitor headphones system. Use of the SUB 1 and SUB 2 outputs does not interfere with normal functioning of the MAIN OUT and MONITOR OUT jacks.

The TAPE OUT jacks have the same signals as the SUB 1 and SUB 2 jacks. This facilitates recording while using the mixer as a stereo sound reinforcement board.

Channel Patch Connections

The CHANNEL PATCH jack on channels 7 and 8 of the 829 and channels 9 to 12 of the 1229 provides a convenient point to intercept the channel signal. This jack is pre-fader, post-equalization and is of the 3-conductor ("stereo", or "tip, ring, sleeve") type. When a 3-conductor plug is inserted, the channel signal path is broken. The tip contact becomes a post-eq, pre-fader output while the ring becomes an input to the PAN and

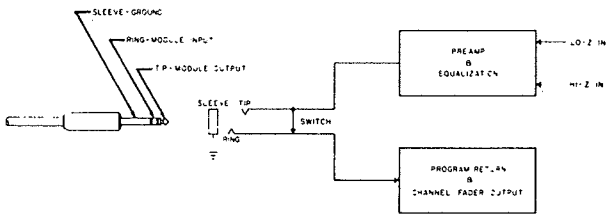

Figure 1

FADER controls. Figure 1 shows the signal path and the connection of the jack. As the diagram shows, when a plug is inserted a special switch breaks the connection between tip and ring. This arrangement has many applications, some of which will be described below.

The channel patch points are an excellent place to insert effects units which are to affect one channel only. Examples of such units might be a frequency shifter for a voice input, compressors, limiters, graphic equal-

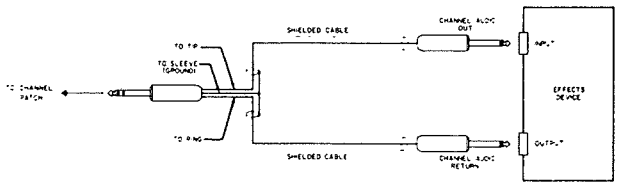

Figure 2

izers, flangers, etc. As diagrammed in Figure 2 the tip connection is wired to the input of the effects device output. The sleeve connection is always ground. If several effects units are to be connected to the same channel they may be connected in series. The input of the first effects device comes from the tip connection of the channel patch jack. The first device's output goes to the input of the second device. The output of the second device feeds the next and so on. The last device's output is then returned to the mixer via the channel patch jack ring connection. It is also possible

to bring the output signal from the effects devices into the SUBS RETURN, EFX RETURN, or MAINS RETURN inputs on the rear of the mixer. The channel fader would not control the effects level with this arrangement, all adjustment of the effects signal amplitude would have to use gain controls on the effects units or the appropriate return control on the mixer.

By wiring the tip and ring connections together as

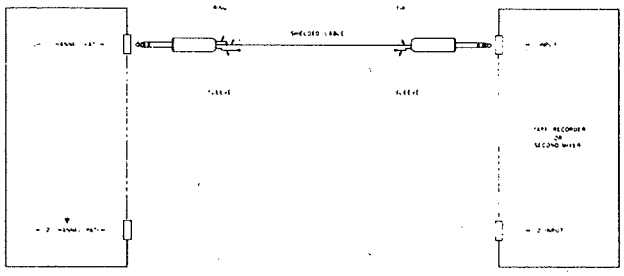

Figure 3

shown in Figure 3, the signal may be tapped for driving another device without breaking the normal signal path. The connection between tip and ring substitutes for the opened switch when the plug is inserted. This provides a drive signal for tape recorders, additional mixers or channel level meters without affecting the normal operation of the channel. By feeding the channel patch points to another mixer's line inputs it is possible to obtain an independent stereo mix for recording or stage monitoring. If a multitrack (four channel) recorder is used the channel patch connections may be run directly into the line inputs of the recorder. When this is done it is also possible to use the 29 series mixer simultaneously as a PA Mixer with all of its normal functions. If the monitor and/or effects busses are not needed, they may be used to pre-mix some of the instruments before recording. Their outputs would then be used to feed one or two of the recorder inputs. After recording, the mixer may be used for mixdown by feeding the recorder outputs to the line inputs on the mixer and using the subs for a stereo output mix. Additional effects may be added to the mix at this time.

Power Amplifiers

The power amplifiers in the 29 series mixers are a very rugged design which is capable of large amounts of power (over 300 watts per channel into 2 ohms). As such they should be treated with some care to avoid damaging loudspeakers to which they are connected. If your loudspeakers cannot handle the power available from the 29 series, fuses should be installed in the lines between the amplifiers and the speakers. A good place to mount these fuses is on the rear of the speaker cabinets. One fuse should be used for each speaker system, preventing the entire system from going dead if a fuse should blow. The fuses should be fast blow or instrument speed (faster than fast blow) to prevent having the speaker protect the fuse by blowing first.

The power amplifiers are internally protected against most fault conditions such as short circuits and overheating. However some CAUTIONS are in order.

1. Never connect the two power amplifier outputs together. This may result in damage to one or both of the amplifier channels. When connecting cables to the amplifier outputs, care should be taken that the other end of the cable really does go to the speakers and does not snake back around to the other amplifier channel.
2. Never block the cooling vents underneath or on top of the mixer. If the mixer is placed on carpet it is important that it be raised (with books or small pieces of wood) up off the carpet enough to allow an inch of cooling space underneath. Cables should not be run under the mixer since they may block the vents. If both channels of the amplifier shut down during use it is probably because the unit overheated. Allow it to cool, clear all vents of obstructions and turn the unit on again.
3. If the amplifier outputs are shorted the amplifier will protect itself but the temperature rise will be somewhat faster than if the outputs were connected to speakers. Therefore to prevent eventual thermal shutoff it is advisable to remove shorts as quickly as possible.

If desired, the power amplifiers may be used separately from the main and monitor mixer outputs. Inserting a phone plug into the appropriate AMP IN jack on the rear panel will disconnect the normal amplifier input and feed in the signal present on the plug. By using patch cords to the submaster outputs the unit may be converted to a powered stereo mixer. If a patch cable is connected from the EQ OUT jack to a signal processor (such as a parametric equalizer) input, the output may be patched into the corresponding AMP IN jack.

Grounding and Shielding

One very important aspect of any sound system is hooking it all up and making it run. All too often the sound system is plagued with hum and buzzes that

stubbornly refuse to go away. The best defense against this happening is to understand where they come from and what can be done to eliminate them.

The chassis of electronic equipment are carriers of currents related to the power obtained from the wall outlet. Most professional equipment has a three-prong power plug to bring the main power in. One of the flat prongs is the high side of the line, the other flat prong is the low side. The round prong is the ground connection. (This scheme is similar to the arrangement on the XLR connectors of most professional equipment, including the 29 series channel inputs.) The power from the line is applied to the power transformer inside the mixer, but a small amount leaks into the chassis and is returned to ground by the ground connection on the plug. Since wires have resistance, there is a small voltage developed by these ground currents. When two pieces of equipment are connected together there is usually a difference in the chassis voltages, causing some of the ground current to flow through the shields of the signal wires. This current (which is at 60Hz or 50Hz, depending on your power lines) is mixed with the signal currents and cannot be separated out.

One approach which is often used is to break all of the ground connections on the power cords. The chassis are strapped together with heavy wires which meet at one piece of equipment, usually the mixer. The mixer is then grounded to the wall outlet, providing a path for the leakage currents. This technique will work, but it has some severe safety ramifications. Even though the leakage currents are small under normal conditions, if a fault occurs in one of the pieces of equipment the currents can be quite large. The three-wire cord insures that each piece of equipment has a good connection to ground, reducing greatly the risk of electrocution. If the common ground wire scheme is used, the integrity of the grounds cannot be guaranteed.

THEREFORE, BIAMP DOES NOT RECOMMEND THE LIFTING OF GROUND CONNECTIONS ON POWER CORDS, AND CANNOT ASSUME ANY LIABILITY FOR INJURY OR DAMAGE RESULTING FROM SUCH ACTIONS BY THE USER.

One thing which does retain the safety of the power grounds and usually helps reduce ground-related hum is the use of a common power connection. Often the outlets in a room are not all on the same power circuit, creating additional differences in the ground potentials of the various pieces of equipment used in the system. Plugging all of the equipment into the same outlet (this will normally require a multi outlet power strip) insures that the power circuit is common. If some of the equipment is mounted a large distance from the rest it may be necessary to use several extension cords to be able to plug it into the same outlet.

If any of the equipment in the system uses a two-prong power plug, it is wise to try reversing the plug in the outlet to see which position gives the lowest hum. Another approach which can be tried is the use of isolation transformers on offending equipment.

The 29 series powered mixers are equipped with a three position POWER SWITCH. The two ON positions use different polarities of the incoming AC line. If hum is encountered in one position of the power switch try the other ON position. This action is electrically equivalent to reversing the plug of the mixer (which cannot be done physically because of the ground pin).

Quality audio cables can do a lot to reduce the resistance of the shield grounds, as well as improving the shielding against electromagnetic interference. The better quality cables will also tend to hold up better under heavy use, preventing connections from becoming intermittent or dying in the middle of a show. This is especially important when dealing with the microphone inputs, since they are at a very low level and have a high gain to the output. The braided type of shielding is recommended.

In some balanced input situations, depending on the method of grounding used, it is possible to reduce the hum generated by ground currents by lifting the shield connection at ONE END of the cable. Rather than cut the shield every time you want to test this it is wise to make a short test cable with a male XLR connector at one end and a female XLR connector at the other. The low and high connections (pins 2 and 3) would be wired at both ends but the shield would only be tied at one end. This cable could then be inserted in line with the offending input to test the effect of lifting the shield without actually having to cut the cable. If an improvement is noted, the cable may then have its shield cut. This technique *is not* applicable to the unbalanced phone plug inputs and outputs.

Input and output cables from the console should always be kept away from power and speaker cables. All wires generate magnetic fields when current flows through them. The strength of the field is proportional to the current in the wire. This is why power lines can cause hum in low level signal lines in and out of the mixer. Speaker cables also carry large currents, but these contain audio signals instead of just 60Hz. These cables can therefore cause crosstalk of the speaker feed into any low level cables running parallel to them. Keeping low level cables on one side of the room and

speaker and power cables on the other will greatly reduce the possibility of such problems.

If the mixer is operated very close to a large transformer it is possible for radiated magnetic fields to induce hum into the input circuits. The balanced transformerless configuration used in the 29 series helps eliminate this problem in all but the most severe cases. If you suspect an interference problem, try moving the console or the offending equipment apart to see if any improvement can be made.

The problem of grounding and shielding is a complicated one. The following references should prove helpful if you still have trouble.

Brown, H., *Don't Leave System Grounding to Chance* EDN Jan. 15, 1972.
Davis, D. and C., *Sound System Engineering* Howard Sams, Pub.
Morrison, R., *Grounding and Shielding in Instrumentation* J. Wiley
Tremaine, H., *The Audio Cyclopedia* Howard Sams, Pub.

When You Run Out of Channels

When buying your sound system it is a good idea to get at least two channels more than you think you need. It always seems that you encounter situations where you need just a little more. If you run out of channels and need one or two more, try plugging mics into both input jacks of one channel. This would normally require one of the mics to be high impedance, but a transformer can be used to get a low impedance input. This works on Biamp mixers because all mic and line inputs function simultaneously. There should not be any overload or distortion problems. If there are, turn the TRIM control counterclockwise and turn up the channel fader. If you don't have enough gain for the extra mic try a channel that has the TRIM control set higher. If there is too much gain try a channel where the TRIM control is set lower. In some situations where a simple mix is required with more microphones you could get by with 10 or 11 mics in an 8 channel mixer or 15 to 16 mics in a 12 channel board. We don't recommend this procedure as a permanent solution to a shortage of channels, but it will do in a pinch. If you always need more channels than your mixer provides you should either replace it with a larger one or add a small mixer to the main one via the stack inputs of the main mixer.

Eleven Steps to Avoiding Feedback

1. Minimize the number of microphones whenever possible. Every time you add another live microphone in the same room with the speakers, the potential for feedback increases. Feedback potential is directly related to the number of microphones and the gain on each microphone. In other words, you can have a few microphones set at high gain or a lot of microphones at a lower gain.
2. Keep microphones as close as possible to the desired sound source. This requires less gain in the mixer and therefore reduces the chance of feedback.
3. Keep unused microphones off whenever possible. If there isn't anything important going into it, there isn't any need for it to be on.
4. Keep microphones away from other objects (floors, walls, cabinets, etc.) as much as possible. These surfaces allow unwanted sound to bounce into the microphones.
5. When positioning the house speakers make sure they are not too close to the microphones, and that they do not point toward the microphones. The speakers should be closer to the audience than the microphones so that the sound cannot go directly into the microphones. There should be no reflective surfaces where sound can bounce from the front of house speakers into the mics.
6. Keep house speaker systems up high, not on the floor. Point horns toward the last row of the audience.
7. Use tone control boost with discretion. If you can cut bass instead of boosting treble you will be better off.
8. If a channel signal has little energy in the bass or treble try cutting the unused portion of the frequency range away. When miking a bass drum turn down the treble. When miking an acoustic guitar turn down the bass.
9. Use electronic signals from preamp outlets of electronic instruments (i.e. synthesizers, organs, electric bass, electric guitar, etc.) where possible.
10. If there are a lot of microphones and they can be broken up into groups, try submastering the groups to get better control of overall gain. This method allows you to bring down the gain of a group of mics with a single fader and increase the gain of another group of microphones with another fader. You can then increase the gain for solo work by decreasing the gain for some other mics. If the two submaster channels supplied are

not sufficient you can add small mixers for the microphone groups and feed them into the line inputs of the main mixer. You only have a limited amount of gain available before feedback. Submastering allows you to move this gain around more easily.

11. Use the graphic equalizers or notch filters to notch out room modes or resonant peaks in the system. Only cut positions should be employed. The graphic equalizers are not a substitute for the procedure described above. Equalizers are made primarily for controlling tonal quality and not for fixing feedback problems. Only after the other procedures have been followed should the equalizers be used. One-third octave equalizers such as the BIAMP EQ270A allow finer control of notching if necessary to cut the feedback.

Modifications

NOTICE

The modifications described below are to be performed by qualified service technicians only. There are hazardous voltages inside and Biamp Systems, Inc. assumes no responsibility for injury or damage to personnel or property resulting from such modifications or their installation. Care should be taken not to damage circuitry inside the mixer since such damage is not covered under warranty.

PHANTOM POWERING

It is relatively easy to add phantom powering to the 29 series mixers. Any one or more of the input channels can be converted for such operation. If 15 volt phantom powering is sufficient (it is for all except a few air condenser mics) it is possible to add phantom powering to the channel by adding a few parts to the input channel circuit. The following are required for each channel to be converted.

R37	100 ohms	¼ W	Resistor
R36	6.8k ohms	¼ W	Resistor
R38	6.8k ohms	¼ W	Resistor
C21	100uF	16 V	Capacitor
C25	10 NP	25 V	Capacitor
C26	10 NP	25 V	Capacitor

Figure X shows the location of the components to be added to the circuit board. If a higher phantom powering voltage is desired, leave out R37 and wire an external power supply to the junction of the two 6.8k resistors. A common power supply may be used for all of the channels.

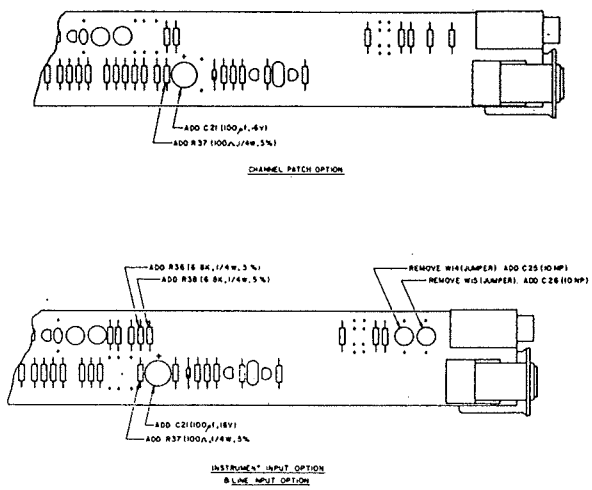

Figure X

29 Series Specifications

FREQUENCY RESPONSE

+0, -3dB, 20Hz to 40kHz;
± 0.5dB 50 Hz to 15kHz
Subs, Main and Monitor Faders at 0dB.

RISE TIME

8.75 μsec. (Taken at a system gain of 50dB.)

SLEW RATE

Mixing console section: Greater than 10v/μsec.
Power amplifier section: Greater than 28v/μsec.
Total system: 28v/μsec.

POWER OUTPUT

(Both channels driven at rated THD.)
8 ohm load: 150 watts 20Hz to 40kHz
4 ohm load: 220 watts 20Hz to 40kHz
2 ohm load: 300 watts 40Hz to 20kHz.

POWER OUTPUT

(Single channel driven at 1kHz.)
8 ohm load: 200 watts
4 ohm load: 330 watts
2 ohm load: 500 watts

TOTAL HARMONIC DISTORTION

8 ohm load:
Less than 0.25% from 250mw to 150 w, 20Hz to 40kHz
4 ohm load:
Less than 0.25% at from 250mw to 220w, 20 Hz to 40kHz
(Input Fader set at -6dB, Sub 1 Fader at 0dB, Main Fader at 0dB, Trim at -30dB; system gain 40dB)

SMPTE INTERMODULATION DISTORTION
8 ohm load: Less than 0.15% at rated power
4 ohm load: Less than 0.25% at rated power
(Input Fader set at -6dB, Sub 1 Fader at 0dB, Main Fader at 0dB, Trim at -30dB; system gain 40dB)

MAXIMUM VOLTAGE GAIN: (Trim Control at 0dB)
60dB ± 2dB Channel In to Sub 1 Out
74dB ± 4dB Channel In to Main Out
69dB ± 2dB Channel In to Monitor Out
52dB ± 2dB Channel In to Channel Patch
38dB ± 2dB Subs Return to Main Out
23dB ± 2dB Mains Return to Main Out
22dB ± 2dB Efx Return to Main Out
0dB ± 2dB Eq In to Eq Out
26dB ± 1dB Amp In to Speaker Out
100dB ± 3dB Mic In to Speaker Out

MIXER SECTION RATED OUTPUT
0dBv (ref. 0.775 v rms) into loads 2k ohms or greater

MAXIMUM MIXER SECTION OUTPUT
+18dBv (ref. 0.775 v rms) into loads 2k ohms or greater

MAXIMUM INPUT SIGNAL
Microphone Input: +7dBv
Line Input: +30dBv

INPUT IMPEDANCE
Microphone Input: greater than 3k ohms
Line Input: greater than 24k ohms
Instrument Input: greater than 100k ohms
Channel Patch: greater than 3k ohms
Mains Return: greater than 30k ohms
Efx Return: greater than 12k ohms
Subs Return: greater than 20k ohms
Graphic Eq.: greater than 8k ohms
Amplifier Input: greater than 20k ohms

OUTPUT IMPEDANCE
Sub 1, Sub 2, Main, Monitor, Efx, Eq: 100 ohms
Channel Patch: 620 ohms
Speaker Output: 150 milliohms

HUM AND NOISE
Equivalent Input Noise (20Hz to 20kHz, input termination 150 ohms, Trim control at 0dB attenuation)
-126 dBv EIN
-128 dBv EIN (measured at the Channel Patch)
Output Noise (20 Hz to 20kHz measured at Sub 1 and Sub 2 Output)
-94dBv residual output noise (all Faders down, Sub 1 and 2 set at 0dB)

AMPLIFIER SIGNAL TO NOISE RATIO re 150 watts
Main and Monitor: 110dB IHF A weighted

CHANNEL EQUALIZATION
Low: 50Hz, ± 15dB shelving
Mid: 3kHz, ± 12dB peaking
High: 8kHz, ± 15dB shelving

PROGRAM GRAPHIC EQUALIZATION
± 12dB Cut and Boost at 50Hz, 100Hz, 200Hz, 400Hz, 800Hz, 1.6kHz, 3.2kHz, 6.3kHz, 12.5kHz

CROSSTALK
-50dB @ 1kHz, adjacent inputs
-50dB @ 1kHz, input to output

INPUT STAGE COMMON MODE REJECTION RATIO (CMRR)
Greater than 40dB at 60Hz
Greater than 50dB at 1kHz
Trim at 0dB attenuation

PEAK INDICATORS
LED indicator in each input module turns on when the signal level at the Channel Patch point is +8dBv.

METERING (Main and Monitor)
10-segment LED display indicating from 0.2% power output to 100% power output in 3dB (twice power) steps.

SOFT CLIPPING CIRCUIT RANGE
Greater than 30dB input overdrive to Power Amplifiers

PHANTOM POWERING
May be provided at user option, +15v dc is available inside the console, or an external power supply may be used.

POWER CONSUMPTION
AC Line Voltages:
100 volts, 15 amps, 50/60Hz—Japanese models
120 volts, 12 amps, 50/60Hz—U.S. and Canadian models
220-240 volts, 6 amps, 50/60Hz—Australian and European models

DIMENSIONS
829: 623 mm wide (24½")
1229: 750 mm wide (29 9/16")
Either Unit: 210 mm high (8¼")
592 mm deep (23 5/16")

NET WEIGHT
829: 21.99kg 48.5 lbs
1229: 23.59 kg 52 lbs

Block Diagram

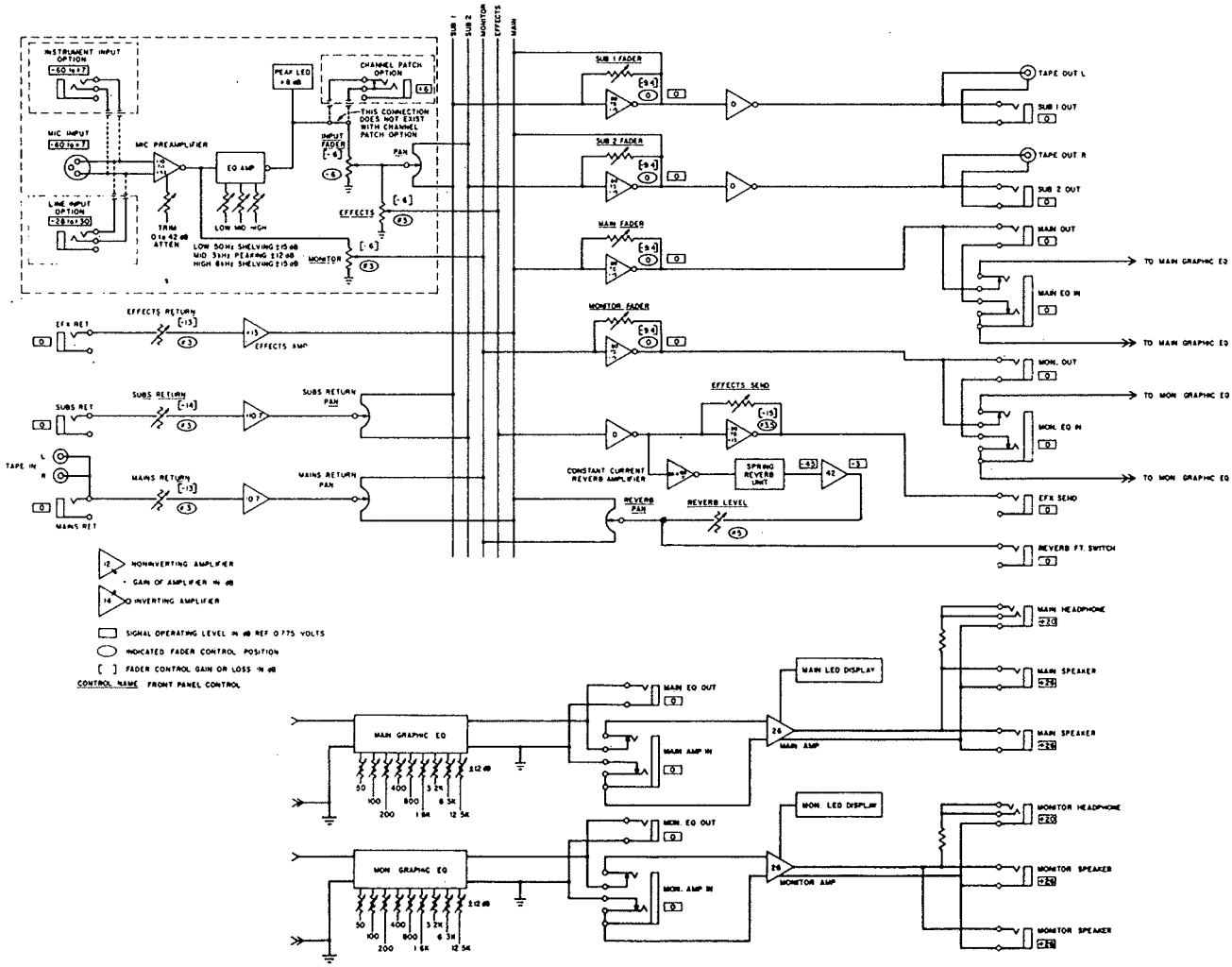

Limited Warranty

BIAMP SYSTEMS, INC. warrants to the original consumer purchaser of each BIAMP product that the unit is free from defects in materials and workmanship. This express warranty commences on the date of purchase from an authorized BIAMP dealer and extends for one year. Completion and return of the warranty registration card enclosed with each unit within ten days of the date of purchase is a condition precedent to coverage and performance under this express warranty.

EXCLUSIONS AND LIMITATIONS: This warranty will be VOIDED if the serial number has been removed or defaced, or if the unit has been subjected to abuse, alterations, attempted repair by any person not authorized by warrantor to make repairs, accident, or installation contrary to the warrantor's instructions. Cosmetic blemishes, such as handles, feet, and knobs are not warranted. All implied warranties, including the warranty of MERCHANTABILITY are limited to the duration of this express warranty, and, if the registration card is not promptly returned, the implied warranties are limited to the duration of the express warranty if it had been effective. In no event will BIAMP SYSTEMS, INC. be responsible for incidental or consequential damages, except for injury to the person.

HOW TO OBTAIN REMEDY: Carefully pack your BIAMP product and return it to one of the BIAMP Authorized Service Centers, or write the BIAMP Customer Service Department at the address below for instructions on how to return your unit to the factory. Pack a letter with the unit explaining the nature of the problem and giving your name and address. You are responsible for freight and insurance charges to the Authorized Service Center or the factory.

WHAT BIAMP WILL DO: BIAMP will repair or, at its option, replace each unit covered by this warranty. Units sent to the factory will be returned to the owner freight collect. Units brought to Authorized Service Centers will be held for pickup by the owner for a period of time established by the individual Authorized Service Center, or, at the owner's option, returned to the owner freight collect.

This warranty gives you specific legal rights, and you may also have other rights which vary from state to state. For instance, some states do not allow limitations on how long an implied warranty lasts or the exclusion or limitation of incidental or consequential damages, so the above limitations or exclusions may not apply to you.

Glossary

AMPLITUDE
The size of a signal. This may be expressed as a voltage, a current or a power.

ATTENUATE
The process of making a signal smaller. The amount of attenuation is the LOSS of the device.

ATTENUATOR
A device (usually a potentiometer) which makes signals smaller, i.e. attenuates them.

AUXILIARY INPUT
A general purpose input for feeding in equipment of the user's choice which may be needed at a particular time. Aux inputs, as they are usually called, are almost always line level jacks.

BALANCED
A connection scheme in which the two signal wires are at equal potential with respect to ground. The wires are therefore said to be balanced with respect to ground. In balanced connectors there are three pins, one for each signal lead and one for ground.

BASS BOOST
The action of making the low frequency sound louder. Adding 10dB of bass boost to a signal makes the low sounds 10dB louder (twice as loud).

BASS CUT
The action of making the low frequency sounds softer. Adding 10dB of bass cut to a signal makes the low sounds 10dB softer (half as loud).

BIAMP
The fastest growing sound equipment company in the world. Also the name to look for when you buy your next piece of sound equipment.

BIAMPLIFICATION
The technique of driving low and high frequency speakers from their own amplifiers while splitting the low and high frequency sounds apart at line levels before the amplifiers. In a normal system there is a common amplifier for both types of speakers and the splitting is done at speaker levels.

BREATHING
An undesirable side effect introduced by some limiters and compressors. When it occurs, the background noise appears to be changing in level constantly, sounding much like a person breathing.

BRIDGING INPUT
A type of input which has a very high impedance from each of its two terminals to ground. This allows connecting it across balanced or unbalanced, high or low impedance lines without affecting the signal level on the line.

BUS
A bus is a signal line inside a console which adds inputs together that are fed into it. If three signals are assigned (fed into) a bus the bus output will contain all three of them in the relative amplitudes at which they were applied.

CENTER FREQUENCY
The frequency at the center of a filter's response. In the case of a band pass filter it is the frequency of maximum gain. For a band reject or notch filter it is the frequency of minimum gain. Center frequency of a peaking equalizer is the frequency that has its gain changed the most.

CLIPPING
When an electronic circuit is driven beyond the maximum voltage it can deliver it is said to be clipping. This word comes from the appearance of the output waveform when clipping occurs; it looks as though the top and bottom have been clipped off.

CLOSE MIKING
Close miking refers to the placement of microphones very close to the sound sources to be picked up. This reduces the pickup of room reverberation and helps prevent crosstalk of sound between microphones.

CORNER FREQUENCY
The frequency at which the response of a filter starts to roll off or to rise. In a high pass filter it is the frequency above which there is flat response and below which it has reduced gain.

CUTOFF FREQUENCY
The upper or lower frequency limit of a device's response. When referring to loudspeakers, tape recorders, amplifiers, etc. it is the highest or lowest frequency they can reproduce without significant attenuation.

DECIBEL (dB—also dBm, dBv, dBV, SPL)
The dB is a logarithmic measure of the ratio of two quantities. When dealing with voltages or sound pressures it is 20 times the logarithm of their ratio. When dealing with powers, it is 10 times the logarithm of their ratio. (This is because powers are voltages squared and their logarithms are twice as big.) The use of dB always requires a reference level. Reference levels are often signified by a letter such as dBm, dBv, etc. (see below). If no reference is specified it is implied to be the previous value or the normal value of the quantity being measured. For example, saying that a low EQ control gives 15dB boost means that the low frequency output is 15dB greater than it was before the control was turned. To get a feel for what a dB sounds like consider the following:

1dB is a barely audible difference.
3dB is a noticeable change.
10dB is twice as loud.

dBm
This is a dB measurement which uses 1 milliwatt in 600 ohms as the reference. This is equal to 0.775 volts in a 600 ohm line but is meaningless if the impedance is changed.

dBv
This is a dB measurement which uses 0.775 volts as its reference level. It is independent of the impedance of the circuit under consideration. In a 600 ohm system it is equivalent to dBm.

dBV
This is a dB measurement which uses 1 volt as its reference. It is independent of the impedance of the system under consideration.

dB SPL
This is a measure of acoustic sound pressure level in which the reference is 0.0002 dynes/sq. centimeter. This reference is approximately the softest sound the average person can hear. For a comparison of sound pressure levels of various everyday sounds, see the figure below.

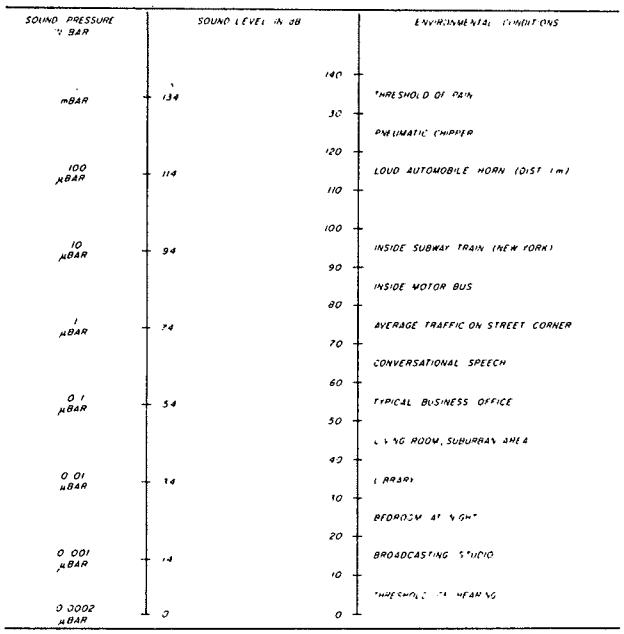

DELAY LINE
A delay line is a device which delays signals in time by preset or selectable amounts. This is usually done digitally or with special IC's called CCD's (charged coupled devices) or BBD's (bucket brigade devices). All three of these techniques sample the signal at a high speed and store the values of the signal away until the required time is over. The samples are then used to reconstruct the signal which is then fed out of the unit. CCD's and BBD's store the sample values in an analog form while the digital techniques store it in a computer.

DIRECT FEED
An audio signal path that avoids the normal output amplifier and gain control stages of a console. The effects send output is a good example of such a feed.

DIRECT OUTPUT
The name of the newsletter which keeps you up to date on what's happening with the fastest growing company in the business—Biamp!

DISTORTION
A change in the waveshape and spectrum of a signal, usually referring to a nonlinear process which adds extra frequency components which were not present in the original signal. See also distortion, total harmonic and distortion, intermodulation.

DISTORTION, TOTAL HARMONIC (THD)
Harmonic distortion is a name for distortion components which are harmonics or multiples in frequency of the original signal. For example, harmonic distortion of a 1kHz signal would be 2kHz, 3kHz, 4kHz, etc. This is not always objectionable because all sounds contain harmonics. The added harmonics may not be noticeable over the ones already present.

DISTORTION, INTERMODULATION (IM)
Intermodulation distortion (IM) is the name for distortion components which are caused by the presence of two or more tones at the input of a device. These components are at frequencies which are the sum and difference of the input frequencies. Since the original signal did not contain these signals they tend to be more noticeable than harmonic components.

DRY SIGNAL
A dry signal is any signal in which there are no effects or reverberation applied.

DYNAMIC RANGE
The range of amplitudes which a device can handle, from its noise floor to its overload point. This is a measure of the range in levels the unit can handle without audible side effects of noise or excessive distortion.

ECHO
A delayed version of a sound which is discernible as a separate entity. Echoes may be created by hard reflective surfaces near the sound source or by special devices which delay a signal and feed both the delayed and original sounds into the signal chain again.

EFFECTS BUS
A summing circuit inside a mixer which adds all of the effects feeds from the individual input channels together.

EFFECTS RETURN
The input on a mixing console which receives the effects signal after it has been processed by the external effects units.

EFFECTS SEND
The output on a mixer which drives the external effects unit. This also refers to the gain control on the mixer which adjusts the amplitude of the effects output signal.

EQUALIZATION
The intentional increase or decrease in level of some frequency bands of a signal for the purpose of changing the tonal character of the sound or compensation for deficiencies in equipment.

EQUALIZER
A device which is used to change the tonal balance of a signal or compensate for deficiencies in equipment. This is accomplished by boosting or cutting some of the frequencies present.

EQUALIZER, GRAPHIC
A device which has many controls, each of which boosts or cuts a small band of frequencies. These controls are arranged so that a graph of the resulting frequencies is displayed.

EQUALIZER, PARAMETRIC
A device which can boost or cut several frequencies while allowing adjustment of the frequency, sharpness (also called Q) and the amount of boost or cut.

EQUALIZER, SHELVING
A type of equalizer whose response resembles a shelf, in which all frequencies past the specified frequency of maximum boost or cut are changed approximately the same amount. In practice the equalizer starts to have an effect at a frequency called the turnover frequency. For a low frequency shelving equalizer the affected frequencies are below the turnover frequency. In the case of a high frequency equalizer the bands above the turnover frequency are affected.

EQUALIZER, PEAKING
A type of equalizer which boosts or cuts a specific band of frequencies around some specified center frequency. The equalizer gets its name because the response characteristic in the boost mode resembles a mountain peak.

FADER
A linear slide action gain control or attenuator.

FEEDBACK
Acoustic feedback, also known as howling, is when a sound system's output gets coupled back to its input with sufficient gain to come out louder than it went in. The amplified signal is then picked up again and comes out louder still. This process continues until the system starts to scream or howl at a very loud level.

FREQUENCY
A measure of how fast something oscillates back and forth, usually expressed in cycles per second or Hertz (Hz). Under most circumstances this is directly related to the pitch of the sound it produces. The higher the frequency, the higher the pitch.

FREQUENCY RESPONSE
The change in gain of a device as a function of frequency. This is usually expressed as a permissible range of gain change over a specified frequency range (i.e. ± 1dB from 20 to 20KHz.

GAIN
The increase in level of a signal passing through a device, usually expressed in dB. When the gain is 0dB the amplitude coming out is the same as that going in (also called unity gain). When the gain is a positive number of dB the output amplitude is greater than that going in. A negative number of dB gain represents a loss (smaller output than input).

GROUND
A point in an electrical or electronic system which is designated the zero potential and is used as a reference for signal voltages.

GROUND LOOP
A connection of grounds between two or more pieces of equipment which causes currents to circulate through the ground conductors. This happens because the various grounds are not at exactly zero potential.

GROUPING
A technique in mixing whereby several signals are combined and controlled simultaneously with a single fader.

HARMONICS
Harmonics are frequency components present in a sound at multiples of the main or fundamental frequency of the sound. The second harmonic is at twice the fundamental, the third harmonic is at three times the fundamental, etc.

HEADROOM
The available room for increasing a signal amplitude before encountering excessive distortion or clipping. Headroom is usually expressed in dB, being the ratio of the present signal amplitude to the allowable signal amplitude.

HERTZ (Hz)
A measure of frequency, formerly cycles per second (cps).

IMPEDANCE
The opposition to flow of alternating current (AC) in a circuit. Impedance is to AC circuits what resistance is to DC circuits.

IMPEDANCE, INPUT
The impedance presented to the signal source by the input jack. This does not mean that the signal sources output impedance should necessarily be this value. This is also the load impedance the source must drive if this input is the only one connected to the source.

IMPEDANCE, LOAD
The total impedance a source must drive in a particular application.

IMPEDANCE, MATCHING
The practice of connecting outputs and inputs together only when their impedances are equal. If they are unequal, transformers or resistive pads are used to correct the mismatch. This technique is not used much any more and is not recommended.

IMPEDANCE, OUTPUT
The impedance in series with the signal from the output jack. This is not normally the impedance that the output wants to drive (not the recommended input impedance of the load).

INPUT LEVEL
The amplitude (in volts, dBm or dBv) of the signal applied to the input under consideration.

JUNCTION BOX
A device containing several jacks which is used to connect several pieces of equipment together.

kHz (kiloHertz)
A thousand Hertz (Hz).

LED
Light-emitting diode, a solid state device which emits light when current is passed through it.

LEVEL
The amplitude of a sound or signal, expressed in dB.

LEVEL INDICATOR
A device for displaying the dB amplitude of locale of a signal. VU meters are examples of level meters, but modern equipment is tending to use LED level indicators because of their greater reliability, ease of use and greater accuracy.

LIMITER
A compressor with a very high compression ratio above an adjustable threshold. For signals below this threshold there is no effect. Signals above the threshold are attenuated as much as necessary to maintain their level at or near the threshold. The signals are therefore "limited" to the threshold value.

LINE INPUT
An input designed to handle line level signals. These inputs are often unbalanced and are normally 2-conductor ¼" phone jacks.

LINE LEVEL
Line level refers to a nominal signal of +4dBv or +8dBv, depending on the particular application. Broadcast systems normally use +8dBv (1.95 volts), while recording studios and sound reinforcement systems normally use +4dBv (1.23 volts).

LINE OUTPUT
An output jack that supplies a line level output signal.

MICROPHONE LEVEL
The average signal level out of a microphone. Microphones vary widely in their output level, both between microphone types and with the particular sound being picked up. Microphone levels are normally assumed to be around 0.001 volt or -57dBv. Signal levels 50dB higher than this are not uncommon when miking such instruments as drums.

OHMS
A unit of measure for electrical resistance. A one-ohm resistor will draw one amp of current when one volt is applied to its terminals. The larger the resistance (the more ohms) the less current will flow when a given voltage is applied.

OVERLOAD
A condition in which a device is forced to handle a signal which is too large, causing the device to distort the signal or in some way behave incorrectly.

PAD
A network of resistors which is used to reduce the level of a signal, normally to prevent it from overloading an input.

PAN
A process whereby a signal may be continuously split between two outputs or mix busses. The total level in the two outputs remains relatively constant while the balance between the outputs is adjusted.

PARALLEL
When two or more devices are connected with their corresponding terminals together they are said to be in parallel. To connect two speakers in parallel the positive or red terminals would be connected together and the two negative or black terminals would be connected together.

PHANTOM POWER
A technique for powering microphones from a main power supply without adding power wires to the microphone cable. It consists of using the shield for a ground connection while the power (normally a positive DC voltage) is applied to both signal leads of the balanced cable. This technique is used to avoid having to use batteries in microphones that require power.

PHONE PLUG
A standard connector that is used for audio signals. It is ¼" in diameter and 1¼" long (excluding the handle portion which comes in many shapes and sizes).

PHONO PLUG (also called RCA plug)
A plug which is normally used on Hi-Fi equipment for interconnecting signals.

POST EQ
A signal output from a mixer which is taken after the equalization controls is said to be post eq.

POST FADER
A signal output from a mixer which is taken after the channel fader is called post fader.

PRE EQ
A signal output from a mixer which is taken before the equalization controls is called pre eq.

PRE FADER
A signal output from a mixer which is taken before the channel fader is called pre fader.

PUMPING
An undesirable side effect introduced by some limiters and compressors. When it occurs the music or voice can be heard to be changing in level at times when it is not supposed to. It sounds like someone is twisting the volume control or master fader up and down continuously.

REACTIVE
A load is said to be reactive if it stores some of the energy fed to it by the amplifier driving it and feeds it back again slightly later in time. Capacitors and inductors have this property, which is why reactive loads are sometimes referred to as capacitive or inductive. Most loudspeakers are reactive loads.

RESISTOR
An electronic component which absorbs power thereby reducing the current or voltage in a circuit.

REVERB
A device which adds an artificial room sound to a signal.

RISE TIME
The time required for a signal waveform to rise from 10% of its instantaneous amplitude to 90% of its instantaneous amplitude.

SERIES
A series connection is one in which a signal must flow through each of the devices in the connection. To connect two loudspeakers in series, the positive lead of the signal would be connected to the positive lead of the first speaker. The negative lead of the first speaker would go to the positive lead of the second speaker. The negative lead of the second speaker would then go to the negative lead of the source.

SLEW RATE
The speed with which a device can change its output voltage.

SUBMASTER
A fader which controls the level of a group of signals after they have been mixed together but before they have been sent to the main output fader.

TRANSFORMER
A device which changes the input or output impedance of one device to match the output or input impedance of another device.

UNBALANCED
A signal line or connector which has its voltage referenced to chassis ground.

VA
A shorthand term for volts times amps. The product of volts and amps is watts if the load is purely resistive and not reactive. If the load is reactive the wattage is lower even though the VA may be the same. Power amplifiers are normally VA limited and deliver their hightest power when driving a resistive load.

WET SIGNAL
A wet signal is any signal in which an effect or reverb has been applied.

XLR
A type of connector, normally having three pins, which is usually used for connecting microphones.